C-141
FLIGHT ENGINEER

SYSTEMS SCHEMATICS

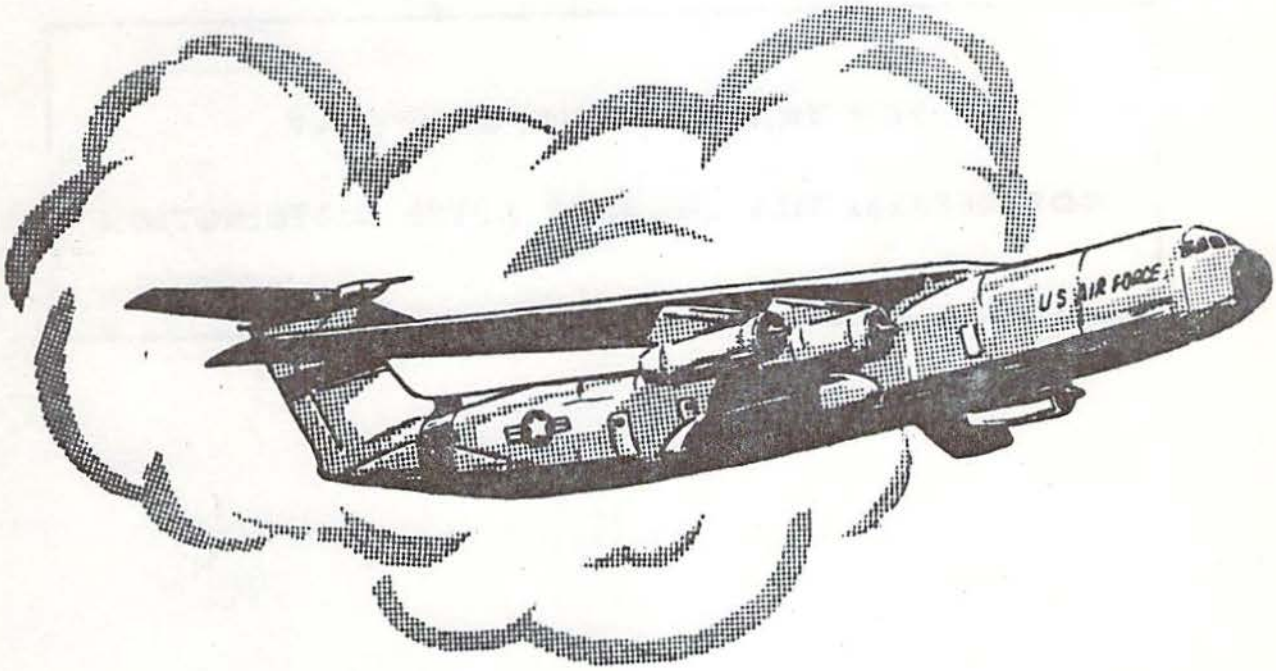

63RD MILITARY AIRLIFT WING(MAC)
NORTON AIR FORCE BASE, CA

FOR TRAINING PURPOSES ONLY

NOT NECESSARILY CURRENT AFTER DISTRIBUTION

C-141 AIRCRAFT SYSTEMS HOME STUDY BOOK

FOREWORD

This home study book has been reviewed and is approved for use in the C-141 Flight Engineer Initial Qualification Course. This student home study book is a supplemental reference which you may retain permanently. It will provide you with study material to help you understand and assimilate our classroom instruction.

We have attempted to omit all superfluous data and present you with a simple, condensed text of the aircraft systems, component units, and their operation. It will provide a valuable source of interesting and readable information, compiled expressly for you as a flight crew member.

NOTE

It must be understood that technical orders and other official directives supersede this guide when the information contained herein conflicts.

CONTENTS

INTRODUCTION

The Lockheed C-141 Starlifter is a modern jet aircraft, designed primarily for transporting cargo. Powered by four Pratt and Whitney TF33 turbofan engines, rated at 20,250 pounds of thrust each, the aircraft is capable of transporting approximately 70,000 pounds of cargo. There are presently two models of the C-141 Starlifter, the "A" model and the "B" model. The "A" model is 145 feet long with a wing span of 160 feet. The cargo compartment may be loaded with ten pallets or configured to accommodate aft facing seats, side facing seats, or for aeromedical evacuation of litter patients.

The "B" model is 168 feet 4 inches long with a 160 foot wing span. The cargo compartment may be loaded with thirteen pallets with the same alternate configurations as the "A" model.

Design features include a fully pressurized and air conditioned flight station and cargo compartment. Cargo loading is straight in from the rear, over an adjustable ramp. Personnel loading is through troop doors located on each side of the fuselage aft of the center wing section or over the cargo ramp. The single high wing is fully cantilevered and swept back at a 25 degree angle. On the "A" model, integral wing fuel tanks have sufficient capacity to permit a ferry range of approximately 6000 miles. With the addition of the air refueling capability, the "B" model range is limited only by mechanical and human limitations. A high "T" tail provides improved operating characteristics and simplified cargo loading. The fully retractable, tricycle landing gear consists of dual nose wheel assembly mounted under the forward fuselage and two dual tandem, main gear assemblies mounted in pods attached to each side of the fuselage. Deceleration on the ground is accomplished by eight multiple disc-type wheel brakes with full antiskid protection and reverse thrust provisions on each of the four engines. The flight station contains provision for a normal crew and relief crew. Facilities include a crew lavatory and galley.

An auxiliary power unit (APU), mounted in the left main gear pod, furnishes air for the aircraft pneumatic systems and drives an AC generator to supply an alternate source of electrical power. The APU is operational only on the ground and allows the aircraft to operate independent of ground support equipment, when necessary.

Conventional, fully powered controls provide aircraft maneuverability while airborne. Control about the roll axis is provided by ailerons mounted on the outboard trailing edge of each wing. Primary and backup power for the ailerons is supplied by aircraft hydraulic systems. Emergency operation is possible by mechanically operated booster trim tabs which are part of the ailerons. Control about the yaw axis is by a rudder attached to the trailing edge of the vertical fin, powered by aircraft hydraulic systems. Control of the pitch axis is by an elevator mounted on the trailing edge of the horizontal stabilizer which is also powered by aircraft hydraulic systems.

Fowler-type wing flaps on the wing trailing edge, and spoilers mounted on upper and lower wing surface of each wing serve to decrease aircraft speed and increase the angle of descent. On the ground these units assist the wheel brakes and thrust reversers in minimizing ground roll.

All-weather flying capability is assured by wing and engine anti-ice, horizontal stabilizer de-ice, windshield heat, and rain removal provision. In addition to a complex avionics system, the aircraft is equipped with an all-weather landing system (AWLS) that permits landing with extremely limited visibility.

SECTION I AIRCRAFT GENERAL

TABLE OF CONTENTS

Chapter 1

THE AIRCRAFT

General Description

The C-141 Starlifter is a long-range, high speed, high altitude, swept wing monoplane, designed for use as a heavy logistic transport. The designed gross weight of the aircraft is normally 325,000 pounds. Refer to the dash one for EWP limits.

Cargo Compartment

The C-141's value as a strategic cargo transport is its design for straight in aft loading. Also, by design, the large unobstructed cargo compartment was built to be fully compatible with the Air Force 463L materials handling system.

On the "A" model, up to ten standard 463L pallets may be loaded quickly. Alternate configurations will accommodate 136 troops in aft facing seats, 152 troops, or 122 paratroops, or 79 litter patients, and 13 additional seats for attendants or ambulatory patients.

The "B" model may be loaded with thirteen 463L pallets. Alternate configurations will accommodate 166 troops in aft facing seats, or 208 troops, or 155 paratroops, or 103 litter patients, and 13 additional seats for attendants or ambulatory patients.

Figures do not include two (2) loadmasters.

NOTE

B Model limited to 200 troops due to present oxygen system.

Underwater Acoustic Beacon

The beacon is mounted in the left underdeck equipment compartment, and is contained in a cylindrical watertight aluminum case capable of withstanding high-G impact shock and deep water immersion. The beacon consists of a self-contained battery, an electronic module and a transducer. The shock-mounted battery occupies approximately two-thirds of the case and is separated from the electronic module by a bulkhead which is integral with the case. The opposite end contains a teflon-insulated water switch.

The beacon radiates a pulsed acoustic signal into the surrounding water upon activation by its water-sensitive switch. Search operations for beacon equipped aircraft, which have crashed in water, are conducted by utilizing a receiver equipped with a directional hydrophone.

Operating Frequency	37.5± KHZ
Operating Depth	Surface to 20,000 feet
Pulse Length	Not less than 9 milliseconds
Pulse Repetition Rate	1 Pulse per second (APPS for Mod 1)
Operating Life	30 Days (12± 2 Days for Mod 1)
Battery Life in Beacon	1 Year

Engine Overheat and Fire Detection System

Engine overheat and fire are detected by a single, continuous, temperature-sensing loop, capable of detecting an overheat or fire in the engine compartment. Should a fire condition exist, a signal would be sent to the Fire Detector control box, located in the right underdeck area. This signal would then be discriminated and the appropriate visual signal displayed.

The visual warning will be indicated by two MASTER FIRE warning lights located on the pilot's and copilot's instrument panels and by lights in the respective FIRE CONTROL HANDLES.

An engine overheat will be indicated by the flashing illumination of the Master Fire Warning lights and Fire Control Handles. A Fire will be indicated by steady red lights in the Master Fire Warning lights and Fire Control Handles.

Also, during a fire, an audible signal is sounded through the flight station loudspeaker and the pilot's, copilot's, observer's, and flight engineer's headsets.

Four fire warning test switches are located on the pilots' control pedestal for the purpose of testing the overheat and fire warning system. Circuit protection and power are received from the Isolated AC and DC buses.

APU Fire Detection and Warning System

The APU fire detection system has the same type loop as the engine system; however, it will not indicate an overheat condition. The Fire Detector control box is also located in the right underdeck area.

A fire in the APU compartment will cause a visual warning to be displayed on the flight engineer's panel, the pilot's annunciator panel, and on the APU fire control panel which is located aft of the crew entry door. At the same time, an audible warning will be sounded through the flight station loudspeaker and the pilot's, copilot's, observer's, and flight engineer's headsets.

Protection and power for this system comes from Main AC #4 and Isolated DC.

The bailout alarm will also sound, if any doors in the door warning system are open, and the APU control switch is in RUN.

The audible signal may be silenced by an audible fire alarm silence button located on the pilots' emergency engine shutdown panel. This button will not silence the bailout alarm.

Fire Extinguishing System

The fire extinguishing system provides fire protection for zone 1 (combustion and turbine section), zone 2 (accessory section) of each power plant nacelle and for the APU compartment. Two dual outlet fire extinguisher agent conta ners and associated plumbing are mounted in the pylon aft fairing of each outboard pylon. Each system provides fire protection for the inboard and outboard engines on its respective side of the aircraft. Each system can provide two discharges to one nacelle or one discharge to each nacelle. Access to the containers and valves is provided through panels in the pylon fairing. The APU fire bottle, located in the left wheel well, provides a single discharge to the APU compartment. The agent used is dibromodifluoromethane (DB).

An agent discharge button is located behind each engine's fire control handle. Each fire extinguisher container is discharged by the use of an electrically operated explosive squib cartridge. Electrical power is supplied by both the Isolated DC Bus and Main DC Bus, providing a parallel protective circuit. Between the fire control handles for each wing (engines 1 and 2 and engines 3 and 4) is a bottle selector switch, which will allow the selection of the alternate extinguisher container for that system usage if a second application of agent is necessary.

To discharge the APU extinguisher, the APU fire control handle must be pulled before the adjacent discharge switch is armed. Actuation of the discharge switch then routes isolated DC power to the explosive squib.

Portable Fire Extinguishers

Four type A-20 hand fire extinguishers are provided on the "A" model. One extinguisher is located at the flight station under the auxiliary crew seat. Three are located in the cargo compartment: One, immediately aft of the crew entrance door; one, immediately forward of the left-hand troop door; and one, approximately midway down the cargo compartment on the right-hand side.

Five are located in the "B" model cargo compartment: Two, aft of the crew entrance door; two, near the left-hand troop door; and one, midway down the cargo compartment on the right-hand side.

Smoke Detection System

The smoke detector circuit is composed of five detectors on the C-141A and six on the C-141B, an amplifier, test selector switch, and warning lights. Essentially, the detectors are composed of a light and a photocell. The light is shielded so the beam is parallel with the face of the photocell. As long as the air is clear, the light beam cannot reach the photocell. If the ability of the air in the detector to transmit light is reduced by 30 percent, as in a fire, light will be reflected to the photocell and a signal sent to the amplifier. The amplifier is located in the forward right-hand underdeck area. The amplifier will then send the signal to the CARGO SMOKE lights on the flight engineer's panel and the annunciator panel. The test switch mounted on the flight engineer's panel will illuminate a test light, which shines perpendicular to the photocell and is wired in series with the detector light. Illumination of this light will then cause a signal to be sent to the amplifier and warning lights.

Chapter 2

OXYGEN SYSTEM

The aircraft is equipped with two independent liquid oxygen systems, one for the crew and one for personnel in the cargo compartment.

Crew System

Crew oxygen is supplied from a 25-liter converter with normal system pressure of 290-430 psi. The system contains the converter, nine diluter demand automatic pressure breathing regulators, a filler box, two heat exchangers, a manual shutoff valve, five recharger hoses, five walk-around bottles, an oxygen quantity indicator and test switch, and a low quantity warning light.

Oxygen Converter

The 25-liter converter for the crew system is located on the left side of the nose wheel well. It serves the purpose of storing the liquid oxygen and converting it to a gaseous oxygen for breathing.

Heat Exchanger

As the oxygen warms to temperatures above -297°F in the converter, it changes to a gas. The gas is routed from the converter to a heat exchanger, where it is warmed by compartment air flowing over the coils. The heat exchanger is located between the flight station floor and the top of the nose wheel well in the underdeck area. Since the heat exchanger does not warm the oxygen sufficiently for breathing, it is routed through a second heat exchanger located above the crew rest platform in the cargo compartment. This warms the oxygen to breathing temperature.

Manual Shutoff Valve

The manual shutoff valve is in the nose wheel well near the converter. The control, a handwheel, is just aft of the pilot's side console. The purpose of the manual shutoff valve is to isolate the oxygen supply system from the distribution system in case of a cabin fire or a downstream leak.

Crew Oxygen Regulators

An oxygen regulator is at each crew station, lower bunk seat and the two auxiliary crew seats. Crew oxygen regulators are diluter-demand, pressure-breathing regulators.

Each oxygen regulator control panel contains an ON-OFF switch, a two-position diluter switch, a three-position emergency switch, a 0 to 500 psi pressure gage and a flow indicator.

The ON-OFF supply switch serves as a means of shutting off oxygen at each regulator to prevent waste. The oxygen diluter switch allows the crew member to select 100% oxygen or the normal air/oxygen diluter function of the regulator.

The emergency lever, in the EMERGENCY position, causes oxygen to bypass the regulator section and supply pure oxygen at a continuous positive pressure. In the NORMAL position, it allows regulated oxygen flow. The TEST MASK position provides a positive pressure for the purpose of testing the fit of the mask.

NOTE: Normally, the Emergency position is used for oxygen preflight.

Troop System

The troop system is a removable, continuous flow, liquid oxygen system which operates from a supply pressure of 300 psi. The system operates through two regulators that automatically begin metering oxygen at 12,500 to 14,000 feet cabin altitude and shuts off oxygen flow when cabin altitude drops below 11,500 feet. The system also has a manual override switch that will bypass automatic operation of the regulators and supply oxygen at any cabin altitude. The troop system consists of a removable liquid oxygen supply kit, a permanently installed distribution system, and a removable distribution kit.

Removable Liquid Oxygen Supply Kit

The removable supply kit consists of a converter pallet assembly and a regulator panel assembly.

The converter pallet assembly is installed in the forward section of the right main wheel pod. Mounted on the pallet assembly are two 75-liter oxygen converters, two heat exchangers, and two fill-buildup-vent valves.

The two converters are connected in parallel. As the liquid oxygen changes to gas, it flows through its respective heat exchanger on the pallet to the troop oxygen panel, which is mounted inside the cargo compartment.

Regulator Panel

Essentially, the regulator panel consists of two continuous flow regulators, four heat exchangers, a pressure sensing switch, troop oxygen panel, and a therapeutic oxygen manual shutoff valve.

The two continuous flow regulators are connected in parallel with the converters to allow both or either to supply oxygen automatically. Distribution pressure ranges from 29 psi at low cabin altitudes, to 69 psi at high cabin altitudes. If one regulator fails, the other will supply the maximum oxygen flow required. The regulators automatically begin oxygen flow at a cabin altitude of 12,500 - 14,000 feet and automatically close at 11,500 feet cabin altitude. There is a manual override switch on each regulator to allow the oxygen to be turned on at any cabin altitude.

Each regulator also contains a pressure-operated OXYGEN ON indicator which indicates the regulator has been turned on, either manually or automatically.

The four heat exchangers mounted adjacent to the regulators use cabin air circulating around them to warm the oxygen to breathing temperature.

When oxygen starts to flow through either regulator, it will actuate the pressure sensing switch. When actuated, the pressure sensing switch will cause the warning horn to sound, the cargo compartment dome lights to come on BRIGHT, and the OXYGEN ON indicator light to come ON.

The troop oxygen control panel is mounted on the lower center of the regulator panel. The quantity indicators read quantity of liquid oxygen in the converters. The push-to-test button, when actuated, will cause its respective quantity gage to rotate counterclockwise until it indicates 7.5 liters, at which time the LOX QTY LOW light will come on. When the button is released, the gage will return to normal, and the warning light will go out. The two-position toggle switch, labeled OXY LIGHTS AND HORN NORMAL and TEST, is used to test the oxygen indicator lights and warning horn. The horn shutoff button is used to silence the horn after it has indicated oxygen flow.

Troop oxygen masks are of an airline plastic type.

The therapeutic oxygen manual shutoff valve provides a means of using oxygen from the troop system to supply a special oxygen system for litter patients and, when open, charges the manifold for the aft cargo compartment recharger hoses.

Chapter 3

FUEL SYSTEM

Introduction

This is a ten-tank, wet-wing, integral manifold fuel system. The four main tanks, four auxiliary tanks, and two extended range tanks hold 153,352 pounds of usable fuel. The fuel system is capable of supplying any engine from any tank, transferring fuel from any tank to any other tank in flight or on the ground, and single point refueling and jettisoning.

Fuel Tank Vent System

The fuel vent system protects the aircraft fuel tanks from excessive internal or external pressures that could cause structural damage. Should a refueling valve fail open, the fuel vent system has the capacity to handle the overflow. All the fuel tanks are vented by a fuel vent line with an upturned bellmouth inlet near the inboard side of each tank. Two vent boxes are located in each system: one is an inboard vent box, the other is an outboard vent box. Fuel vent boxes are separately sealed compartments in the aft inboard corner of the outboard main fuel tank and the extended range tank. The vent boxes are interconnected by vent lines, and the outboard vent box is vented to the atmosphere by a standpipe. The outboard vent box vents the outboard auxiliary and outboard main tanks. The inboard vent box vents the inboard auxiliary and inboard main tanks. The extended range tank is vented to the interconnecting vent box vent line. Fuel which enters the vent boxes is trapped to prevent this fuel from building up and venting overboard, ejectors are installed which scavenge this fuel and return it to the main tanks.

Fuel Tank Construction

Main Tanks

Each main tank contains a small compartment in the outboard section, called a surge box. The surge boxes in No. 1 and No. 4 main tanks will hold 250 gallons each. The surge boxes in No. 2 and No. 3 main tanks hold 120 gallons each. The main tank surge boxes house the primary and secondary booster pumps, and assure a supply of fuel to the booster pumps during aircraft maneuvers. When the quantity in the surge boxes drops below 50%, it will cause the SUMP LOW light on the fuel management panel to illuminate.

Auxiliary Tanks

Auxiliary tanks contain partial surge boxes and house the primary booster pump. The partial surge boxes serve the same function as the main tank surge boxes but do <u>not</u> actuate a SUMP LOW light.

Extended Range Tanks

Extended range tanks do not have surge boxes but do have bulkheads that divide the tanks into compartments. The bulkheads have one-way flapper valves on the bottom of the bulkhead to allow fuel to flow from the inboard to the outboard side. This assures a supply of fuel to the two booster pumps located in the outboard section. The top of the bulkhead is also open to allow free passage of air and vapors in both directions for proper ventilation.

Booster Pumps

There are two booster pumps in each tank. The outboard pumps in the main and auxiliary tanks are called primary pumps, and the inboard pumps are called secondary pumps. The pumps in the extended range tanks are called inboard and outboard pumps, and are in the outboard compartment of the tanks.

Main tank booster pumps are rated at 23,700 pounds per hour (pph) at 6 psi. Auxiliary and extended range tank booster pumps are rated at 17,000 pph at 31 psi. Each pumping element consists of a 115/200-volt, 3-phase AC motor with an impeller and a 400°F thermal switch for overheat protection. The biggest difference between main tank pumps and auxiliary and extended range tank pumps is the design of the impeller.

Control of the fuel booster pumps are as follows:
Main tank primary - Essential AC powered, 3 phase control
Main tank secondary - Essential AC powered, C phase control
Auxiliary tank primary and secondary - Main AC powered, Main DC control
Extended Range tank inboard and outboard - Main AC powered, Main DC control

Ejectors

Ejectors are installed in each tank. Their primary purpose is to scavenge fuel from low spots within the tank and return it to the surge boxes or to the outboard compartment of the extended range tanks. Ejectors are jet-pumps, activated by fuel flow from the tank booster pumps. The primary booster pump in the auxiliary tanks activates ejectors; and both booster pumps in the main and extended range tanks activate ejectors. One ejector in each main tank will also scavenge fuel from the fuel vent box and return it to its respective surge box.

The primary booster pumps in the inboard auxiliary tank will control ejectors in the extended range tanks. See WARNING in section 3 of Dash One.

CONTROL VALVES

Crossfeed Valves

There are four crossfeed valves -- one for each engine. They are DC motor-driven valves powered from the Isolated DC Bus. Their function is to connect the manifold to the engine and the main tanks to the manifold.

These valves are located on the aft wing beam and can be manually operated if necessary.

Separation Valves

There are three separation valves: Left, center, and right. They are DC motor-driven valves, powered from the Isolated DC Bus. They divide the manifold into four sections. The center separation valve has a thermal relief feature but the left and right separation valves do not.

The left and right separation valves are located on the aft wing beam and can be manually operated if necessary. The center separation valve is located in the center wing dry bay area and can also be operated manually.

Manual Fire Shutoff Valves

Four shutoff valves are located on the front wing beam. They are mechanically controlled by a cable linkage to the fire control handles. They also provide thermal relief protection for the engine side of the valve when the valve is in the closed position.

Refueling Valves

Each tank contains one refuel valve, positioned near the top of the tank. The refuel valves govern the maximum level to which the tanks may be filled during refueling. Each valve automatically shuts off fuel flow to its tank when the preset maximum level is reached. It may be operated manually by a switch on the flight engineer's panel to stop fuel at a lower level. Rate of fuel flow is governed by flow restrictions located between the refuel valves and the lines feeding fuel to the tanks. The diameter of the center hole in the flow restrictions determines the quantity of fuel per unit of time that may be fed to a given tank.

Jettison Valves

Two DC motor-operated control valves connect the jettison lines to the wing fuel manifold. One is located in each wing. During the jettison operation, fuel is jettisoned through its respective wing valve.

Refueling Isolation Valve (A Model) Ground/Isolation Valve (B Model)

The refueling isolation valve is located in the center wing section in the refueling line between the single point refueling adapters and wing fuel manifold. This valve is opened and closed by a switch on the flight engineer's fuel management panel, marked REFUEL ISOL VALVE. This valve must be open during refueling and defueling operations. It is designated as ground isolation valve on B Model aircraft.

SPR Drain Pump and Drain Valve

A 28-volt DC SPR drain pump in the right main gear pod can be energized to pump fuel from the single point refueling lines to the No. 3 main tank. This pump operates in conjunction with an electrically actuated pump drain valve, and is controlled by the REFUELING MASTER switch on the flight engineer's fuel management panel (A Model). On the B Model, this drain pump and valve are controlled by the LINE DRAIN switch on the flight engineer's fuel management panel.

FUEL WARNING LIGHTS

Sump Low Warning Lights

A SUMP LOW warning light, over each main tank fuel quantity indicator, goes ON to show that the fuel level in the corresponding main tank surge box is below the 50 percent level. These lights are controlled by thermistor-type sensing elements attached to the tank units in the surge boxes.

Booster Pump Pressure Low Lights

A single PRESS LOW warning light is located directly above the booster pump switches for each main tank. These PRESS LOW lights will illuminate when the booster pump switches are in the ON position and the fuel pressure drops below normal operating pressure. There are two PRESS LOW warning lights for each auxiliary tank and extended range tank. They are located directly above their respective booster pump switches. These PRESS LOW lights will illuminate only when their respective booster pump switch is ON and the fuel pressure drops below normal operating pressure.

Fuel Jettison Stop Pump Lights

Four jettison STOP PUMP warning lights are located on the fuel management panel. These lights operate through the jettison switches, the outboard auxiliary tank fuel quantity indicators, and the booster pump switches. During normal jettisoning, the STOP PUMP lights will illuminate when the quantity in the outboard auxiliary tank drops to 5500 pounds.

As a management tool, this allows the engineer visual indications that the fuel remaining behind the outboard engine is approximately equal to the quantity behind the inboard engines.

FUEL FEED SYSTEM

Main Tank to Engine

The only valve between the main tanks and their respective engines is the manual shutoff valve, which is controlled by the fire control handle and is normally open. Should the main tank booster pumps fail, the engines can suction-feed only from the main tanks through a by-pass valve in the main tank booster pump scroll housings.

Auxiliary or Extended Range Tank to Engine

Fuel feed from the auxiliary tanks to their respective engines is from the tank booster pumps to the manifold, then through a crossfeed valve to the engine.

Tank to Tank

Fuel may be transferred from tank to tank by pressurizing the manifold with the booster pumps in the tank from which fuel is being transferred, and opening the refueling valve for the tank receiving the fuel.

Fuel Pressure Indication

Fuel pressure indication is taken from the manifold between the left separation valve and center separation valve. It is used primarily during preflight to check pumps and valve operation.

Refueling System

Ground refueling operations are normally accomplished through the single point refueling receptacles. When facilities for single point refueling are not available, the tanks can be refueled individually through filler openings in the wing upper surfaces.

Aerial Refueling is accomplished through the Universal Aerial Refueling Receptacle Slipway Installation (UARRSI). Fuel is distributed to the cross-wing manifold through the air refueling manifold and the left and right air refuel isolation valves. Maximum transfer rate from tanker to receiver is 5900 ppm.

Maximum Allowable Fuel Unbalance

The maximum allowable fuel unbalance for landing configuration between opposite pairs of tanks (other tanks remain balanced) is:

Outboard main tanks	2,700 pounds
Outboard aux tanks	4,000 pounds
Extended range tanks	6,500 pounds
Inboard main and aux tanks	16,000 pounds

Air Refueling System Compnents

The UARRSI is a self-contained unit which includes a housing, combination door and slipway, refueling receptacle, door actuating cylinder, boom latch cylinder, signal amplifier, boom contact switch and boom latch switch.

Slipway Assembly

The slipway assembly contains a hydraulically actuated, two-position door, which is designed to protect and streamline the refuel receptacle when in the CLOSED position and forms the bottom of the slipway assembly when in the OPEN position. The door is hinged at the forward edge and opens downward into the slipway pan.

The door will actuate two switches as it moves to either the FULL OPEN or CLOSED positions. One of these is the door open switch which has two positions: OPEN AND LOCKED and CLOSED. When the slipway door is fully OPEN, the switch is repositioned to the OPEN AND LOCKED position. The function of the switch is to complete a circuit from the signal amplifier to the ready lights when the door is fully open.

The second switch associated with the door is the closed/locked switch. This switch also has two positions: CLOSED/LOCKED and UNLOCKED. In the CLOSED/LOCKED position, the switch will break the circuit to the door unlocked light, which is an indication to the flight engineer that the door is fully CLOSED AND LOCKED. The UNLOCKED position completes a circuit to the door unlocked light. In addition, if the mode select switch is in the OVERRIDE position, it functions as part of the circuit to illuminate the ready lights.

Receptacle Assembly

The aerial refueling receptacle is exposed when the UARRSI slipway door is opened and is funnel-shaped to facilitate entry of the flying boom nozzle of the tanker aircraft. A spring-loaded closed fuel shutoff valve, in the receptacle, is opened by the physical insertion of the boom. When open, this valve permits fuel to flow from the boom through the receptacle into the air refuel

manifold. The receptacle contains a hydraulically-operated toggle-latching mechanism, designed to hold the boom nozzle in place during the fuel transfer operation. An induction coil is mounted on the receptacle, so that it will mate with a similar coil on the boom nozzle of the tanker aircraft, when fully engaged and latched. Pulses are received and transmitted through the coil to position relays in the signal amplifier of both aircraft. In addition, the induction coils serve as a security interphone communications link between the two aircraft when the boom and receptacle are connected during fuel delivery.

There are two switches mounted in the receptacle which are designed to transmit signals from the signal amplifier. One of the switches is the contact switch. In the NO CONTACT position, the switch will complete a circuit to the disconnect lights, as the boom nozzle is withdrawn. In the CONTACT position, the switch will complete a circuit to energize the latch control valve. The second switch is the latch switch and has two contact points. The first set allows power through the signal amplifier, in addition to the induction coil. The second set completes a circuit to the latched lights through the signal amplifier.

During normal operation, the latches are held in the disengaged position by spring forces. Hydraulic pressure to the latch cylinder is shut off by the manual door control valve when it is in the DOOR CLOSED position. In order to drive the latches to the LATCHED position, two separate actions must take place. First, the door control valve must be actuated to the OPEN position, which ports system pressure to both sides of the latch cylinder. Next, the boom nozzle must be fully inserted into the receptacle in order to actuate the contact switch. As this switch is repositioned from the NO CONTACT to the CONTACT position, a circuit is completed from the signal amplifier to the latch control valve solenoid, which drives the latch control valve to shut off pressure to the unlatched side of the latch cylinder. The resulting force imbalance across the cylinder is sufficient to drive the latches to the fully ENGAGED position with the boom. The latch cylinder will continue to hold the latches in the engaged position until the circuit to the latch control valve is broken by the signal amplifier during the disconnect phase of operation.

Aerial Refuel Master Switch

The aerial refuel master switch is located on the aerial refuel section of the flight engineer's fuel management panel. It is used to provide power for the aerial refuel system operation. The switch has two positions: ON and OFF. The ON position will supply power to the aerial refuel signal amplifier, the receptacle slipway lights, fairing lights and wing leading edge lights dimming transformers. It also removes power from the aerial refueling/throttle switch control relay and controls power to the receptacle fairing and slipway lights. The switch receives 28V DC power from the Main DC Bus No. 1 through the aerial refueling control circuit breaker.

Mode Select Switch

The mode select switch is located in the aerial refuel section of the flight engineer's fuel management panel. The switch has two positions: NORMAL and OVERRIDE. When the switch is placed to normal position, it is an integral part of the power circuit from the aerial refueling control circuit breaker through the master switch and reset switch to the signal amplifier. When the switch is placed to the OVERRIDE position, power bypasses the signal amplifer and completes a circuit to the override relay and the amber override light.

The function of the override position of the switch is to permit continued operation of the aerial refuel system, in the event the normal means through the signal amplifier is lost. By energizing the override relay, the normal circuits through the slipway door actuated switches and the receptacle contact and latch switches can be utilized.

Aerial Refuel Isolation Valve Switches

Two aerial refuel isolation valve switches are located on the AERIAL REFUEL portion of the fuel management panel. The switches control the left and right aerial refuel isolation valves through which fuel flows to the left and right wing tanks. In the OPEN position, the valves are open and in the CLOSED position the valves are closed. The left and right valves and switches receive 28V DC power from the Main DC Buses No. 1 and No. 2 through circuit breakers on the flight engineer's No. 4 circuit breaker panel.

Aerial Refuel Disconnect Switches

The pilot and copilot have a disconnect switch located on the throttles. These are the same switches that are used for the automatic throttle system. Their function is changed to disconnect the switches by means of a relay that is deenergized when the aerial refuel master switch is placed on ON. Pressing either of the disconnect switches causes power to be removed from the boom latch solenoid and thereby effects a disconnect. A backup disconnect can be initiated by placing the aerial refuel master switch to OFF, or by pressing the reset button.

Reset Switch

The reset switch is a two-position, pushbutton type switch located in the aerial refuel section of the flight engineer's fuel management panel. The switch is spring loaded to the NORMAL CLOSED position. As such, it becomes an integral part of the power circuit from the aerial refueling control circuit breaker to the signal amplifier. However, this condition is dependent on the mode select switch being in the normal position. The switch is designed to be depressed for a short period of time at the conclusion of the inflight refueling operation.

The effect of the flight engineer depressing the reset switch is an interruption of the power circuit to the signal amplifier which insures that the toggle latches remain in a released position until the boom has been completely withdrawn from the receptacle.

The action of depressing the switch also serves the function of resetting or recycling the signal amplifier to the disconnect mode in the event that a rehookup to the tanker is desired.

Door Unlocked Light

The door unlocked light is located on the aerial refuel section of the flight engineer's fuel management panel and is designed to illuminate whenever the aerial refuel receptacle door is not locked. The power circuit to the light is controlled through the receptacle closed/locked switch in the UNLOCKED position. The light receives 28V DC power from the Main DC Bus No. 1 through the aerial refueling control circuit breaker. This light is wired directly to the circuit breaker and works independently of the other switches.

Aerial Refuel Override Lights

There are three override lights associated with the aerial refuel system. One is located on the aerial refuel section of the flight engineer's fuel management panel and two are located on the pilot's and copilot's overhead panel. The override lights are powered through the aerial refuel control circuit breaker, master switch, mode select switch, in the OVERRIDE position, and the deenergized aerial refuel throttle switch control relay. These lights will illuminate when the aerial refuel system is being operated in the override mode without the signal amplifier in the circuit.

Aerial Refuel Ready Lights

There are three ready lights associated with the aerial refuel system. One is located on the flight engineer's fuel management panel and the other two are located on the pilot's and copilot's overhead panel. In the normal mode of system operation, the lights are powered from the signal amplifier through the door open switch in the OPEN and LOCKED position.

In the override mode of operation, the lights are powered through the mode select switch, the energized override relay, the reset relay, contact switch, door closed/locked switch, disconnect relay, and another set of contacts of the override relay. The lights indicate when illuminated, that the aerial refueling slipway door is opened and locked and that the signal amplifier is in the READY mode.

Aerial Refuel Latched Lights

There are three latched lights associated with the aerial refuel system. One is located on the flight engineer's fuel management panel and two are located on the pilot's and copilot's overhead panel. In the normal mode of system operation, the lights are powered from the signal amplifier, through the deenergized override relay, and the receptacle latch switch in the LATCHED position. These lights will illuminate when the tanker boom is latched in the receptacle.

In the override mode of operation, the lights are powered from the aerial refueling control circuit breaker through the master switch and the mode select switch, the energized override relay and the receptacle latch switch in the LATCHED position.

Aerial Refuel Disconnect Lights

There are three disconnect lights associated with the aerial refuel system. One is on the aerial refuel section of the flight engineer's panel and the other two are located on the pilot's and copilot's overhead panel. In the normal mode of operation, the lights are powered from the signal amplifier through the receptacle contact switch in the NO CONTACT position. In the override mode of operation, the lights are powered from the aerial refueling control circuit breaker, through the master and the mode select switches, the energized override and disconnect relays, and the receptacle contact switch in the NO CONTACT position. These lights will illuminate when the tanker boom is disconnected from refueling receptacle and will remain illuminated until the system is reset or the master switch is placed in the OFF position.

Chapter 4

LIGHTING

Exterior Lights

Landing Lights

A sealed beam landing light is mounted on the bottom of each wing, between the engine pylons. Each light is controlled by two switches on the pilot's overhead panel -- a switch marked RET - OFF - EXT and a light control switch. Either light may be stopped between its extended and retracted positions by moving its respective RET - OFF - EXT switch to OFF. The left or right light control switch turns its respective light ON or OFF. A LANDING LIGHT EXTENDED CAUTION light, on the overhead panel, will come ON anytime either landing light is not in the fully retracted position.

Formation Lights

Nine formation lights are installed on the aircraft: Three on each wing, and three on the fuselage top, aft of the wing. All are controlled by a three position formation light switch marked DIM, OFF, and BRIGHT.

Navigation Lights

The navigation light system consists of three, two-bulb light assemblies. A red light is on the left wing tip, a green light is on the right wing tip, and a white light is on the tail cone. These lights do not flash, but are illuminated continuously. The navigation lights are controlled by a two-position ON-OFF switch.

Anti-Collision Lights

The anti-collision lights system consists of three rotating anti-collision lights. One is on top of the fuselage in line with the wing, one on the bottom of the fuselage on the same line, and one on the upper surface of the horizontal stabilizer.

The lights are controlled by a two-position ON and OFF switch on the "A" model. The "B" model has a three-position switch, LOWER - OFF - ALL, which allows the top light to be turned off during inflight refueling.

Taxi Lights

Two taxi lights are mounted on the inside of each main landing gear door. Operation of these four lights is controlled by one ON-OFF switch on the pilot's overhead panel. In addition, there is an interconnect between this switch and the wing leading edge lights, so that when the taxi lights are turned ON the wing leading edge lights are also turned ON.

Wing Leading Edge Lights

A light is installed on each side of the fuselage in a position which will illuminate the engine pylons and the leading edge of each wing. A wing leading edge light switch, installed on the overhead panel, allows these lights to be turned ON independently of the taxi lights. On the "B" model these lights may also be controlled by a rheostat on the flight engineer's AR lighting panel, when the AR MASTER switch is on.

Wheel Well Lights

One wheel well light is installed in each wheel well for illumination of the landing-gear-down lock. Each light is controlled individually by its respective wheel well light switch. The wheel well light switches are located adjacent to each respective landing gear observation window.

UARRSI Lights

UARRSI lighting is provided by three fairing lights and twelve slipway lights. The fairing lights are located on the forward fuselage just ahead of the UARRSI fairing. They are controled from the flight engineer's air refueling lighting panel as long as the AR MASTER switch is on. Six slipway lights on each side of the slipway are also controlled from the flight engineer's panel providing the AR MASTER switch is on.

Interior Lights

Interior lighting is achieved by use of many individual lighting systems. Flight station lighting consists of instrument lights, instrument panel lights, and utility lights at each of the crew stations. Lighting is also available in the lavatory, underdeck areas, aft crawlway, and vertical stabilizer tunnel. General illumination throughout the flight station and cargo compartment is provided by overhead dome lights.

Emergency Exit Lights

Provisions for eleven emergency exit lights are installed in the aircraft -- one at each emergency exit and at the crew and troop doors. Each emergency exit light contains batteries for independent operation. They are charged by aircraft electrical power.

A three-position (TEST, ARM, and EXITING) EMER EXIT switch on the pilots' overhead panel and two inertial switches, located just aft of the crew entrance door, are the only controls for the system.

The EMER EXIT switch is springloaded to the ARM position. With the switch in this position, loss of electrical power to main DC bus No. 1 or a sudden deceleration causes the lights to illuminate with power from the internal batteries. The lights will extinguish when power is restored or the inertia switches are reset. Resetting of the inertia switch is accomplished by a reset switch on the inertia switch housing.

The lights are tested by placing the EMER EXIT switch to the TEST position. When released, spacing tension will return the switch to "ARM."

To prevent continuous operation of the lights after electrical power is removed, momentarily place the EMER EXIT switch to the EXTING position, then release it to the ARM position prior to removing battery power. This extinguishes the lights and rearms them for normal operation.

The lights can be made portable by pulling the red release handle. When the handle is pulled, a quick disconnect severs the electrical connections, and the light remains illuminated. Once the light is removed from the receptacle, it can be extinguished by placing the release handle back to its normal position.

The emergency exit lights receive arming and charging power from the Main DC Bus No. 1; the extinguishing circuits receive power from the Isolated DC Bus.

Chapter 5

STALL PREVENTION SYSTEMS

Dual stall prevention systems are provided. Each system is independent of the other and comprises a control panel, an electrically heated angle of attack sensing vane, a computer channel, an overhead panel switch, and a control column shaker. The systems are identified as No. 1 and No. 2. No. 1 system acts on the pilot's control column, and No. 2 acts on the copilot's control column. Separate electrical power sources and emergency shutoff switches are provided for each system. During an approaching stall condition, the control shakers are energized. This imparts vibration to the control columns, sufficiently violent as to be immediately identifiable by the pilots. Power is removed from the pitch trim noseup mode. Placing one switch "OFF" does not affect operation of the other system.

The stall computer receives input signals from the angle-of-attack vanes, the CADC's, and flap and gear position. The stall computer has two alarm schedules predicated on the position of the flaps and gear. In the dirty configuration (gear down and flaps extended beyond 60% plus or minus 8%), shaker onset is initiated as a function of angle of attack. In the clean configuration (gear up or flaps NOT extended beyond 60% plus or minus 8%), mach number is also introduced into the stall warning schedule.

The shakers continue to operate until the aircraft has responded and the angle of attack has been reduced below the level at which the shakers were actuated. When this point is reached, the copilot's shaker function is immediately removed. Approximately three seconds later, in the clean configuration only, the pilot's shaker function is removed.

Stall Prevention System Panel

A STALL PREVENTION SYS panel is provided on the pilots' overhead panel. The panel contains two toggle switches, one for the No. 1 system (PILOT) and one for the No. 2 system (COPILOT). Each switch has two positions: (1) Norm, (2) Off. In the "NORM" position, the applicable system is armed to provide stall warning by control column shaker operation. When either the PILOT or the COPILOT switch on the overhead control panel is placed at "OFF," the corresponding system is deactivated and does not provide stall warning. The "OFF" position is used as a system emergency shutoff, or is used if a system malfunction is suspected. Placing one switch "OFF" does not affect operation of the other system.

Stall Prevention Panels

Two STALL PREVENTION panels are provided, one on the pilot's side console and the other on the copilot's side console. Each panel contains a three-position ("TEST," "NORM," "MACH TEST") toggle switch and a stall warning light. The panel on the pilot's side console provides test and visual stall warning capabilities for the No. 1 system, while the panel on the copilot's side console

provides the same capabilities for the No. 2 system. The switch on each STALL PREVENTION panel, when placed in the "TEST" position with the aircraft on the ground, actuates touchdown relays to place the corresponding system in the airborne condition. Shaker operation may then be checked by suitable positioning of the angle-of-attack vane of the system. When the switch is placed in the "MACH TEST" position, the system is similarly placed in the airborne condition, and may be tested for shaker operation at the correct Mach numbers by operating the test switches on the corresponding CADC test panel.

NOTE: Do not place the stall prevention test switch to the "MACH TEST" position if the aircraft is flying at M 0.365 or greater.

The STALL warning light illuminates when the corresponding system has sensed an approaching stall condition and the related computer has transmitted the stall signal to the shaker circuits of that system. The light remains illuminated until the stall condition has been corrected and shaker operation has ceased. The light is included in the instrument dimming circuit, and is dimmed when the instrument lights are dimmed.

System Warning Lights

Individual warning lights are provided on the annunciator panel for each of the stall prevention systems. These consist of a STALL PREV NO. 1 light and a STALL PREV NO. 2 light. The STALL PREV NO. 1 or STALL PREV NO. 2 light is illuminated if a failure occurs in the computer circuits or the vane heating circuit of the corresponding system, or if the corresponding switch on the overhead control panel is off. Placing the applicable switch on the overhead control panel in the "OFF" position deactivates that system and illuminates the annunciator light.

Stall Prevention Computer

The stall prevention computer, on the underdeck avionics equipment rack, contains two completely independent channels. The No. 1 channel receives inputs from the left angle-of-attack vane transducer, the left outboard flap position switch, nose gear position switch, the No. 1 CADC, and from a yaw rate gyro. The No. 2 channel similarly receives inputs from the right angle-of-attack vane transducer, the right outboard flap position switch, nose gear position switch, the No. 2 CADC, and from a yaw rate gyro.

The computer outputs operate the stall prevention systems and also provide visual and audible warning if the spoiler lever is armed during an approach to a stall condition and the aircraft is airborne.

Angle of Attack Vanes

An angle-of-attack vane is mounted on each side of the forward fuselage. The left vane provides angle of attack signals from the No. 1 stall prevention system, and the right vane performs the same function for the No. 2 stall prevention system. The vanes are electrically heated for protection from icing. The vanes are positioned by airflow over them during flight. Vane movement

rotates a shaft in each vane assembly to which a transducer is coupled. The transducer transmits continuous local angle-of-attack signals to the related channel of the stall prevention computer so long as the applicable system is energized.

Stall Prevention System Operation

When either computer channel transmits a stall signal to the corresponding system, the shaker motor of that system is energized. When the stall condition has been corrected, the stall prevention computer removes the shaker signal and the shaker motor of that system is deenergized.

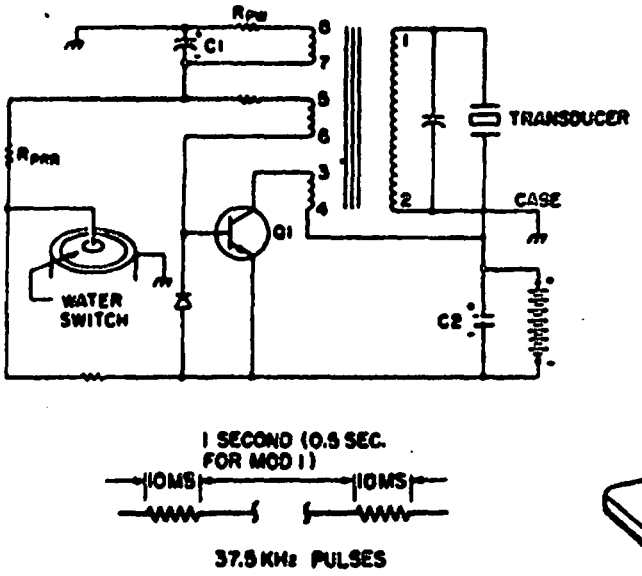
RPW
C1
TRANSDUCER
RPRR
CASE
Q1
WATER SWITCH
C2
1 SECOND (0.5 SEC. FOR MOD I)
10MS
10MS
37.5 KHz PULSES

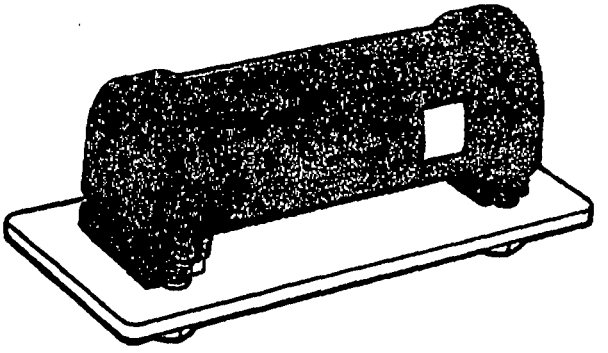

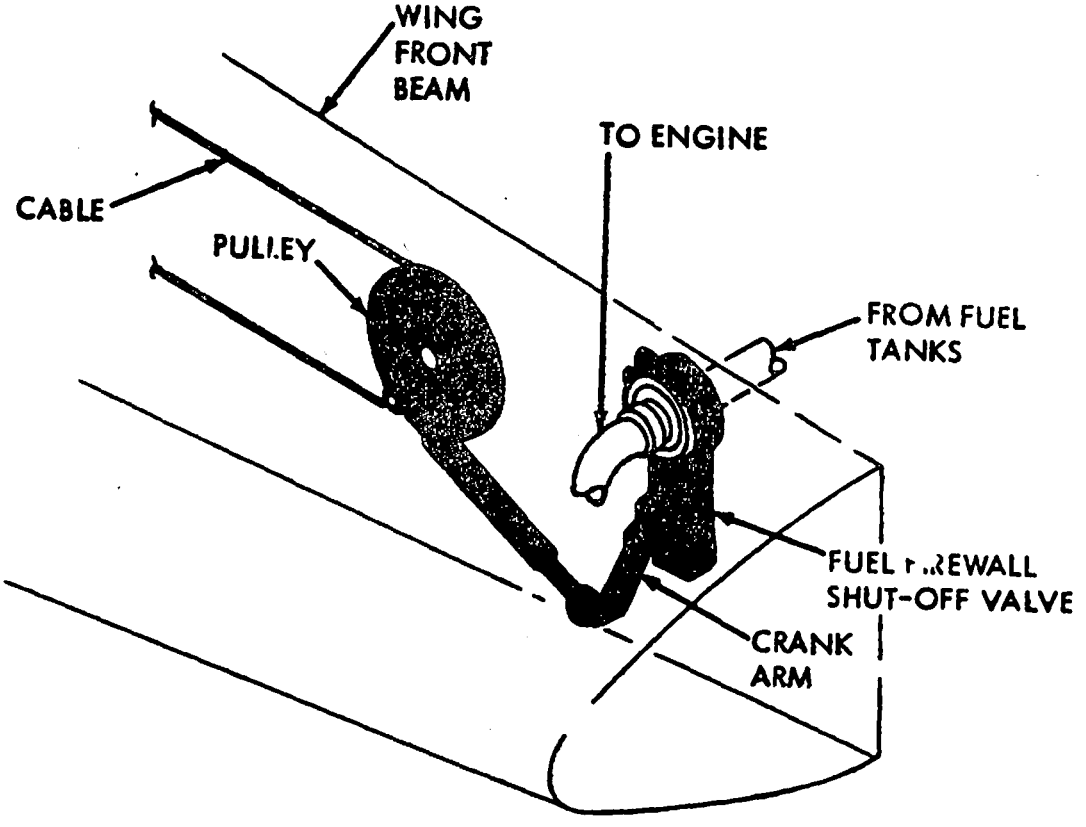
WING FRONT BEAM
TO ENGINE
CABLE
PULLEY
FROM FUEL TANKS
FUEL FIREWALL SHUT-OFF VALVE
CRANK ARM

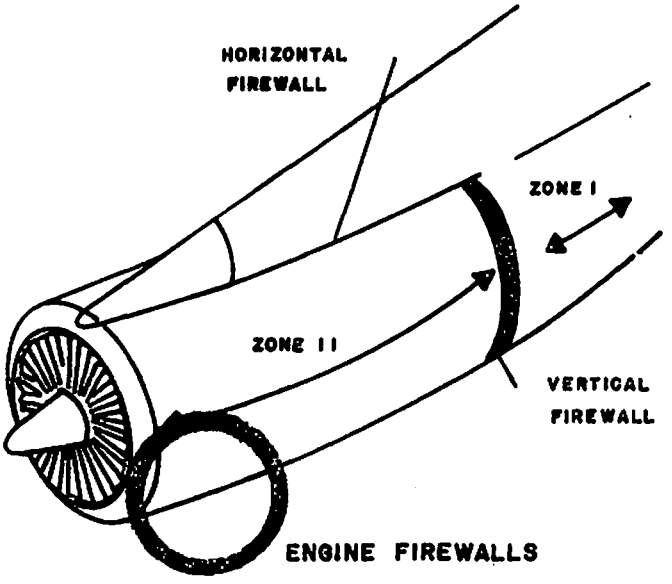

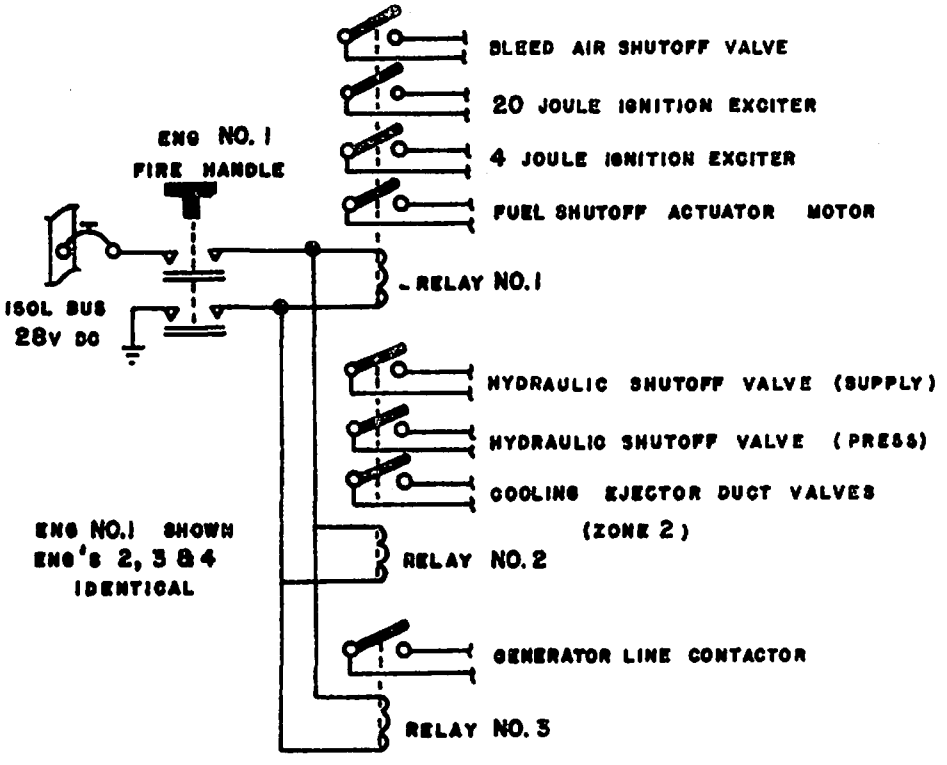

ENGINE FIRE ISOLATION SYSTEM CIRCUIT SCHEMATIC

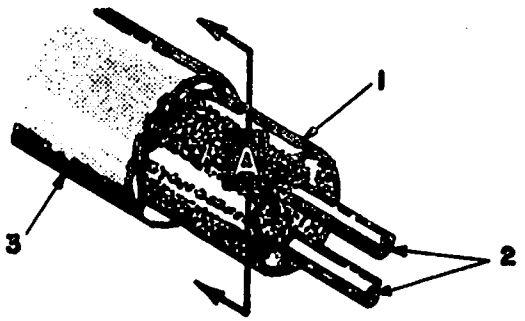

1. CERAMIC-TYPE THERMISTOR CORE
2. NICKLE WIRES
3. INCONEL CONDUCTOR

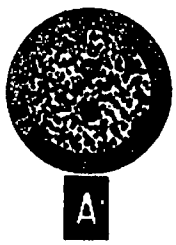

FIRE WARNING AND OVERHEAT DETECTION SYSTEM ELEMENT CUTAWAY

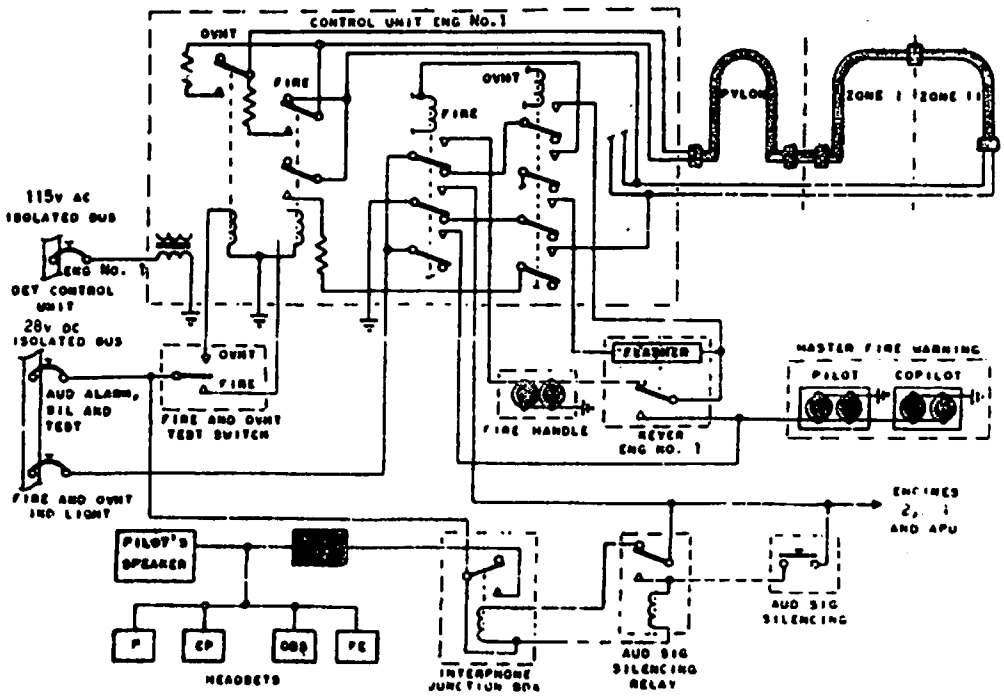

ENGINE FIRE DETECTION - OVERHEAT WARNING SCHEMATIC

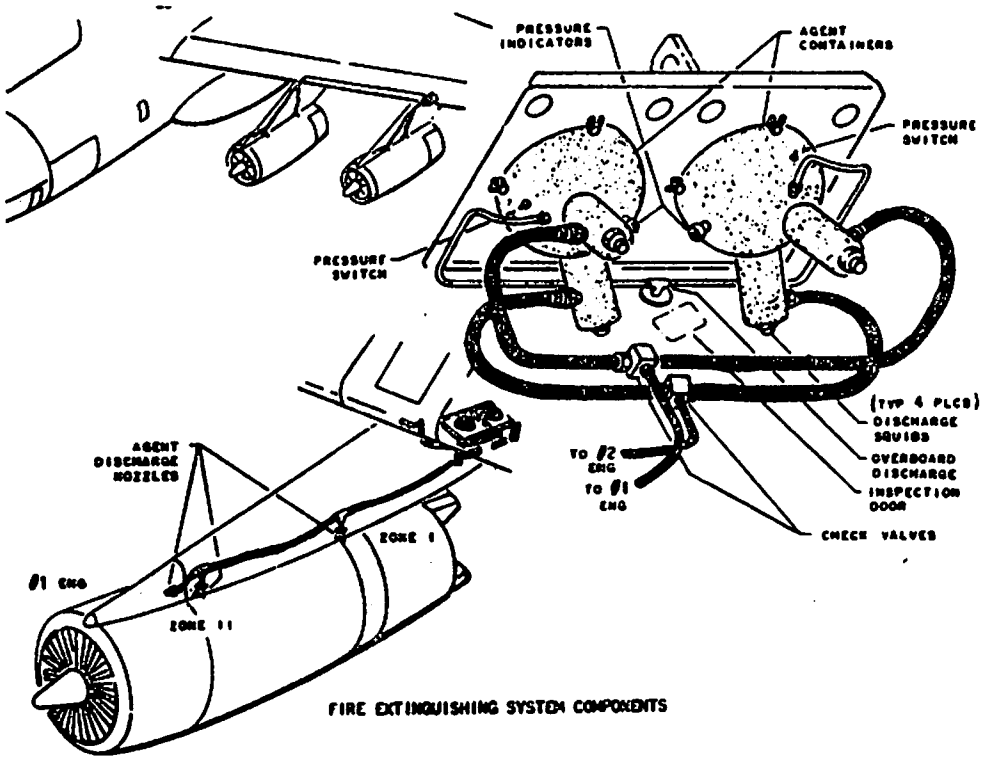

FIRE EXTINGUISHING SYSTEM COMPONENTS

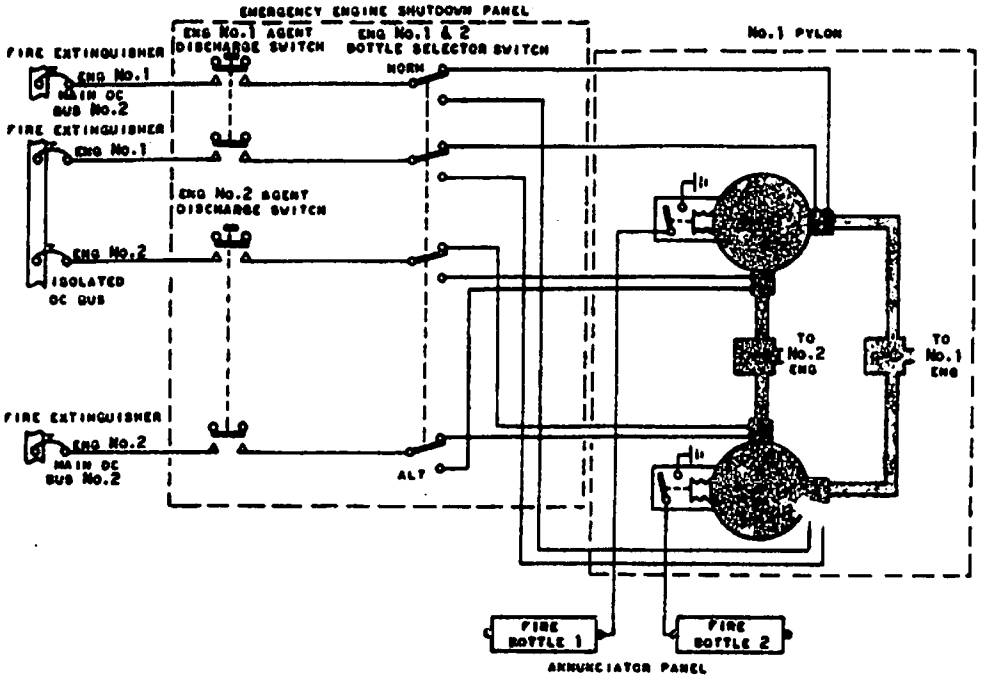

FIRE EXTINGUISHING SYSTEM SCHEMATIC

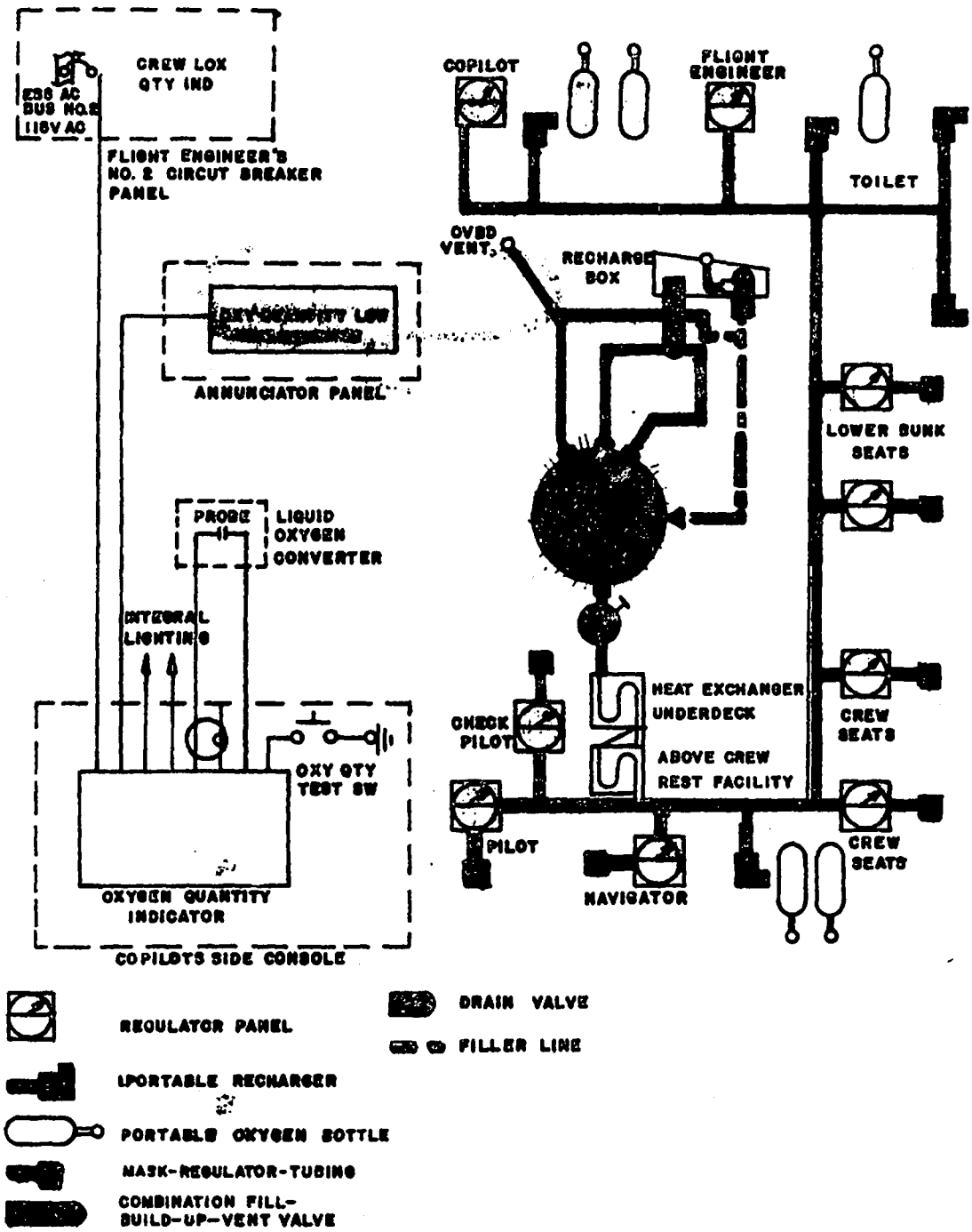

CREW OXYGEN SYSTEM SCHEMATIC DIAGRAM

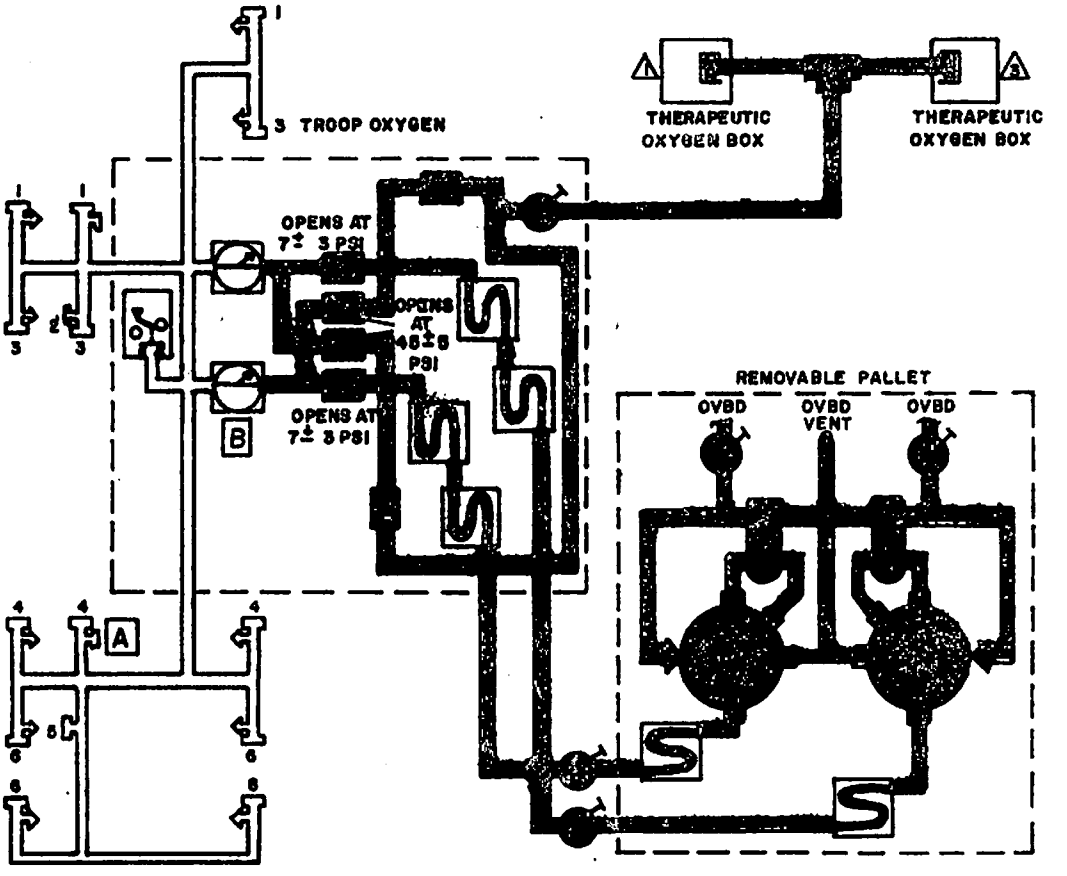
3 TROOP OXYGEN
THERAPEUTIC OXYGEN BOX
THERAPEUTIC OXYGEN BOX
OPENS AT 7± 3 PSI
OPENS AT 46±5 PSI
OPENS AT 7± 3 PSI
REMOVABLE PALLET
OVBD
OVBD VENT
OVBD
A
B

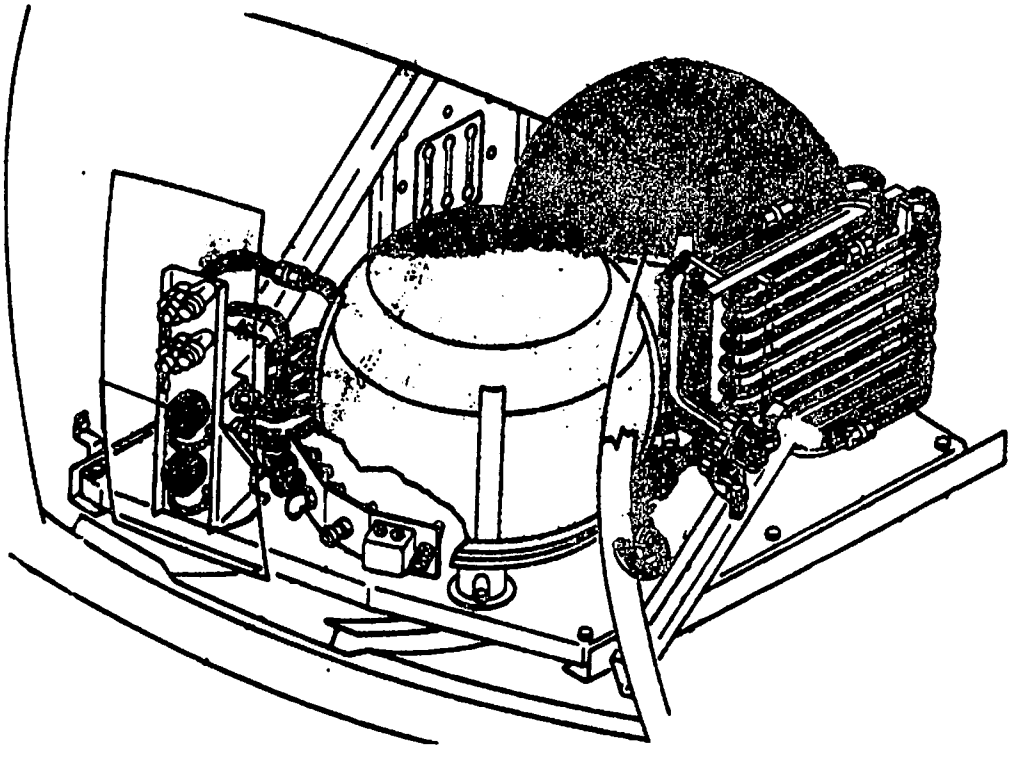

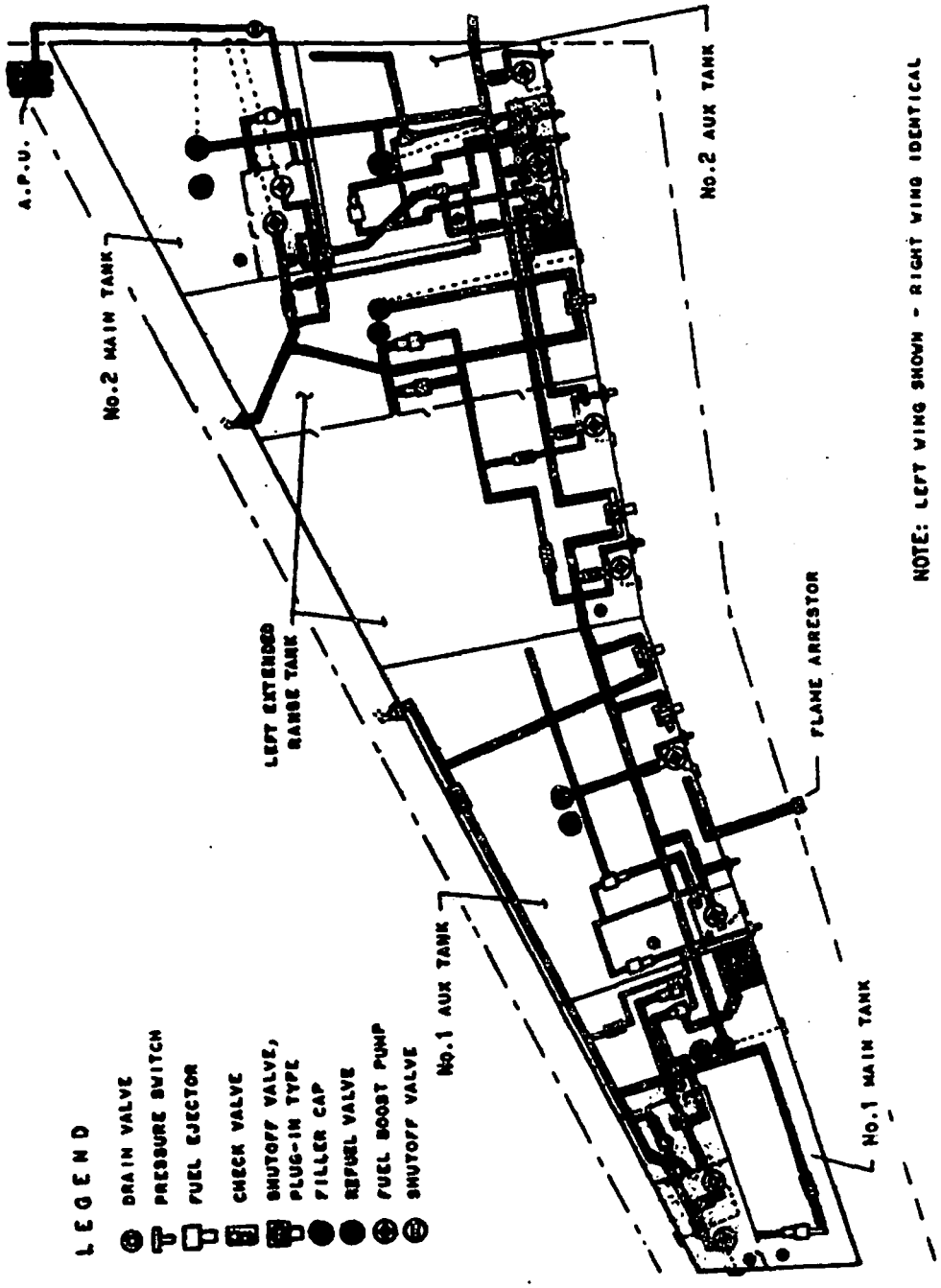

NOTE: LEFT WING SHOWN - RIGHT WING IDENTICAL

FUEL SYSTEM SCHEMATIC

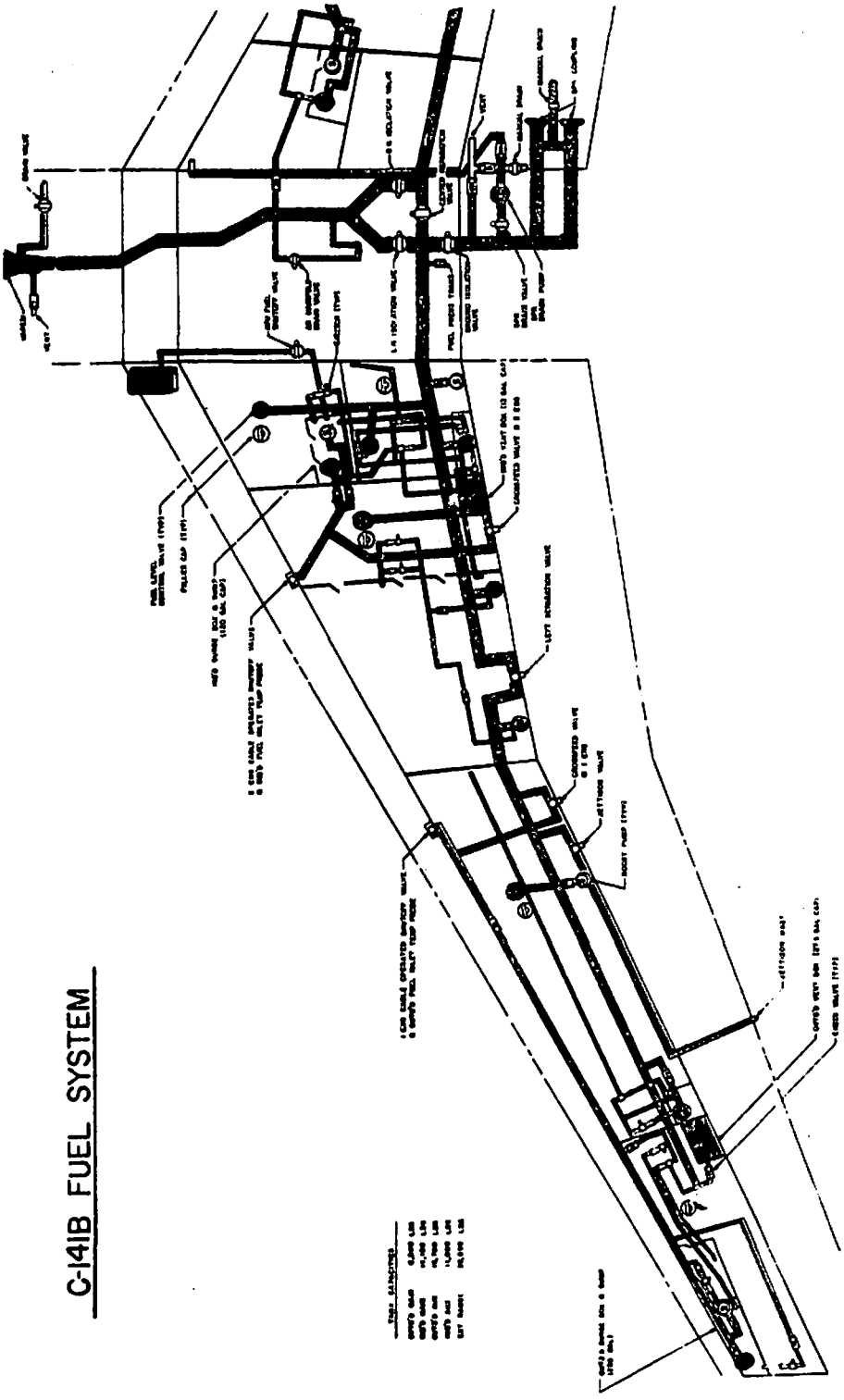

C-141B FUEL SYSTEM

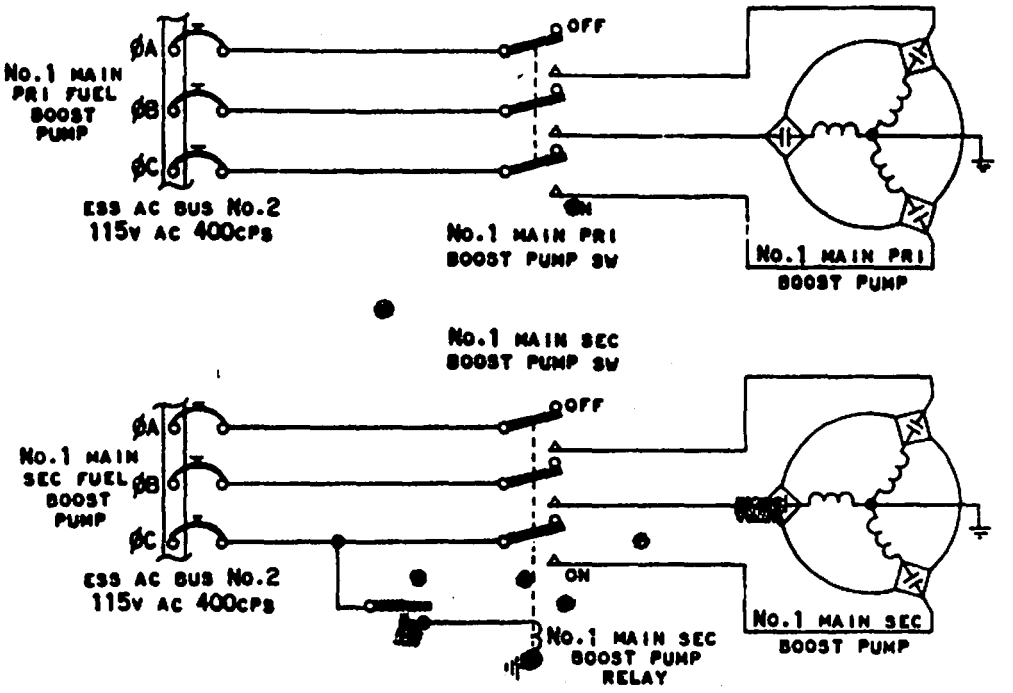

TYPICAL MAIN TANK BOOST PUMP CONTROL

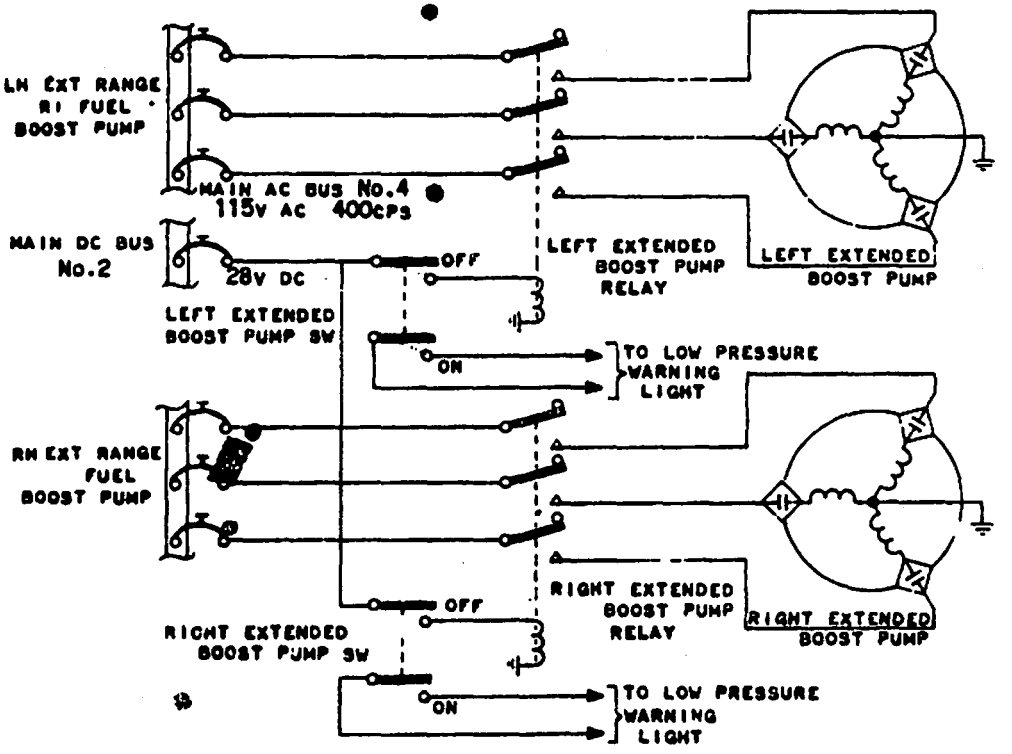

TYPICAL EXTENDED RANGE TANK BOOST PUMP CIRCUIT

"A" model

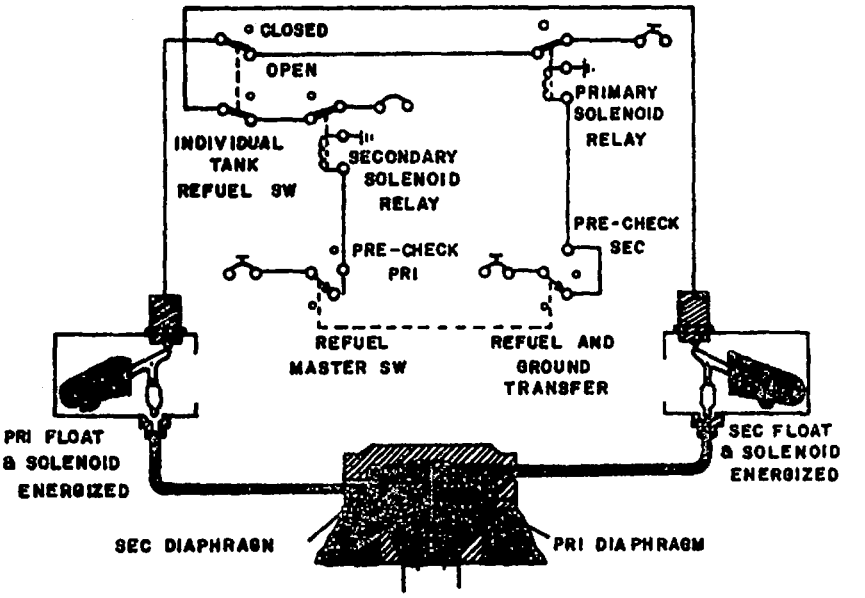

LEVEL REFUEL VALVE WIRING AND SCHEMATIC

"B" model

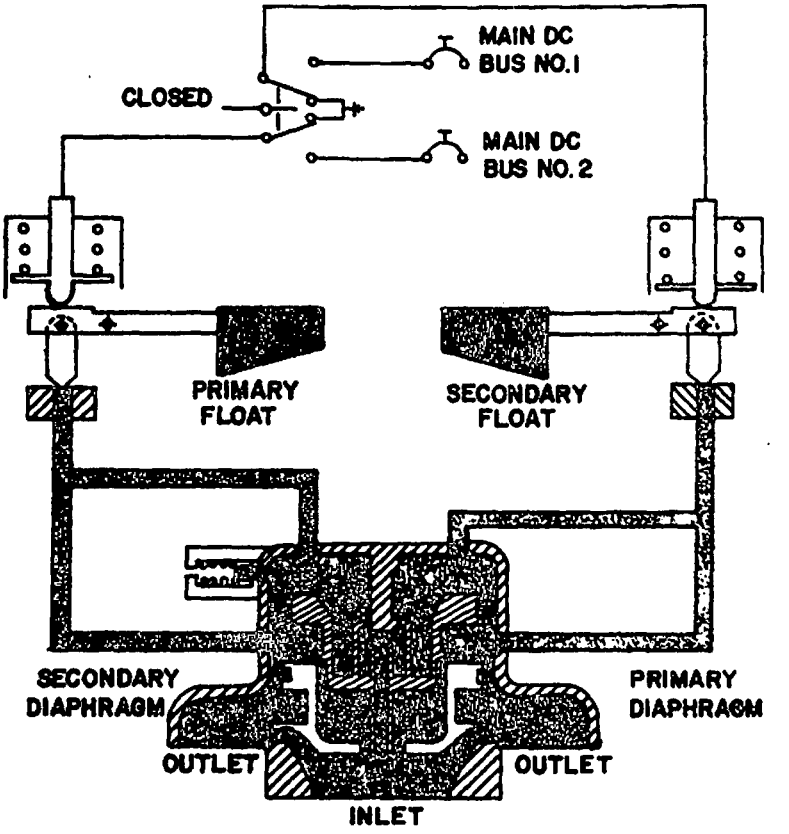

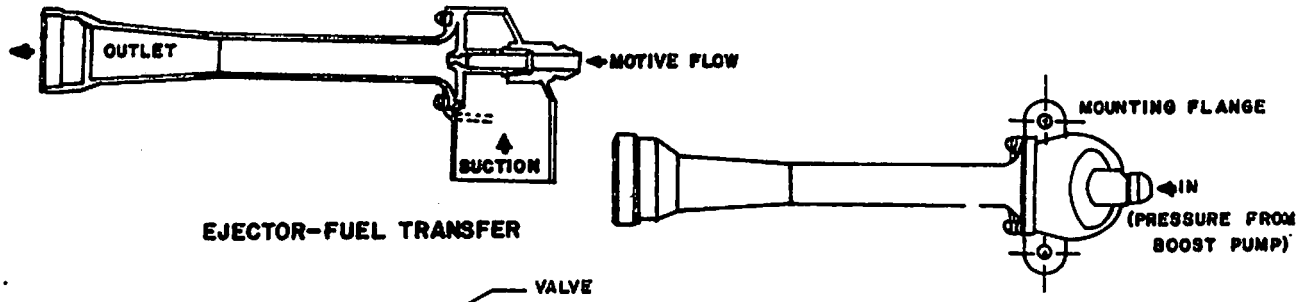

EJECTOR-FUEL TRANSFER

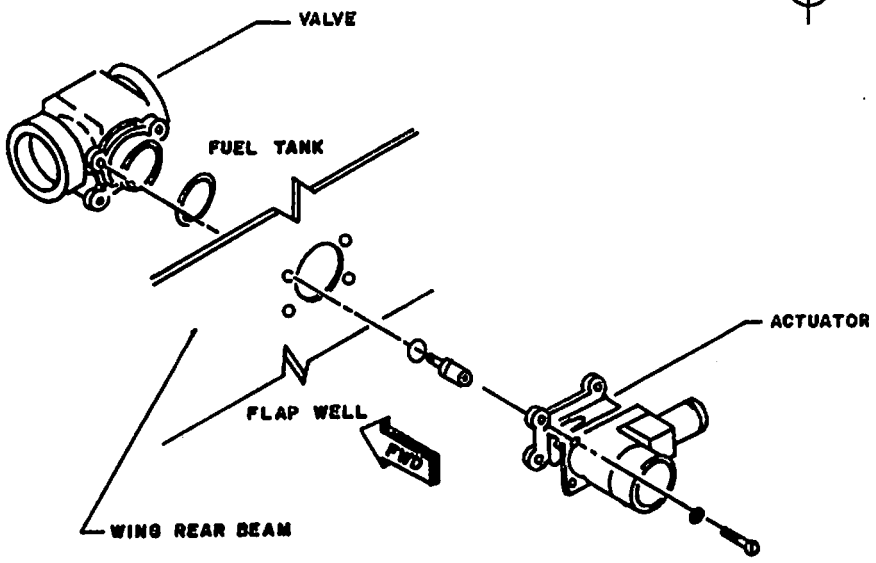

CENTER SEPARATION VALVE

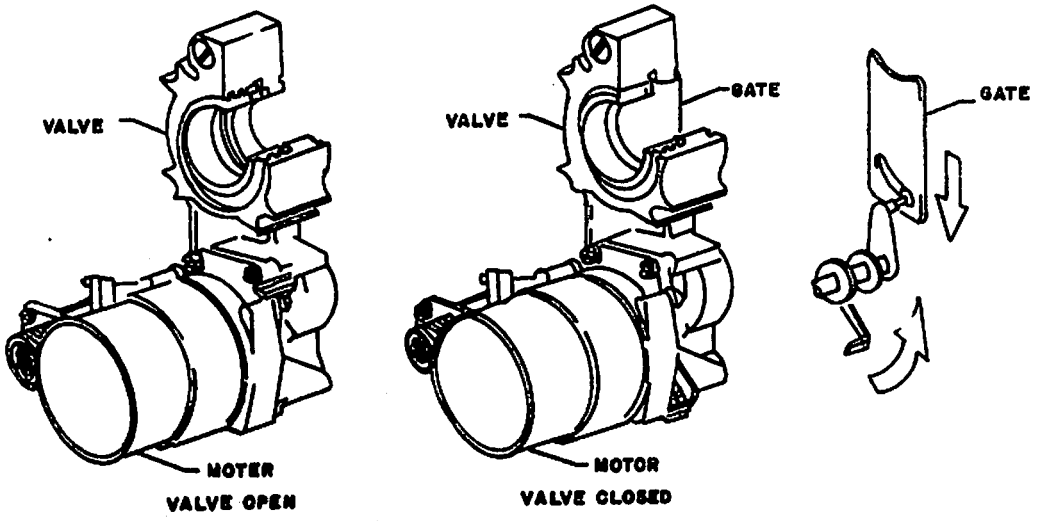

LEFT OR RIGHT SEPARATION AND CROSSFEED VALVES

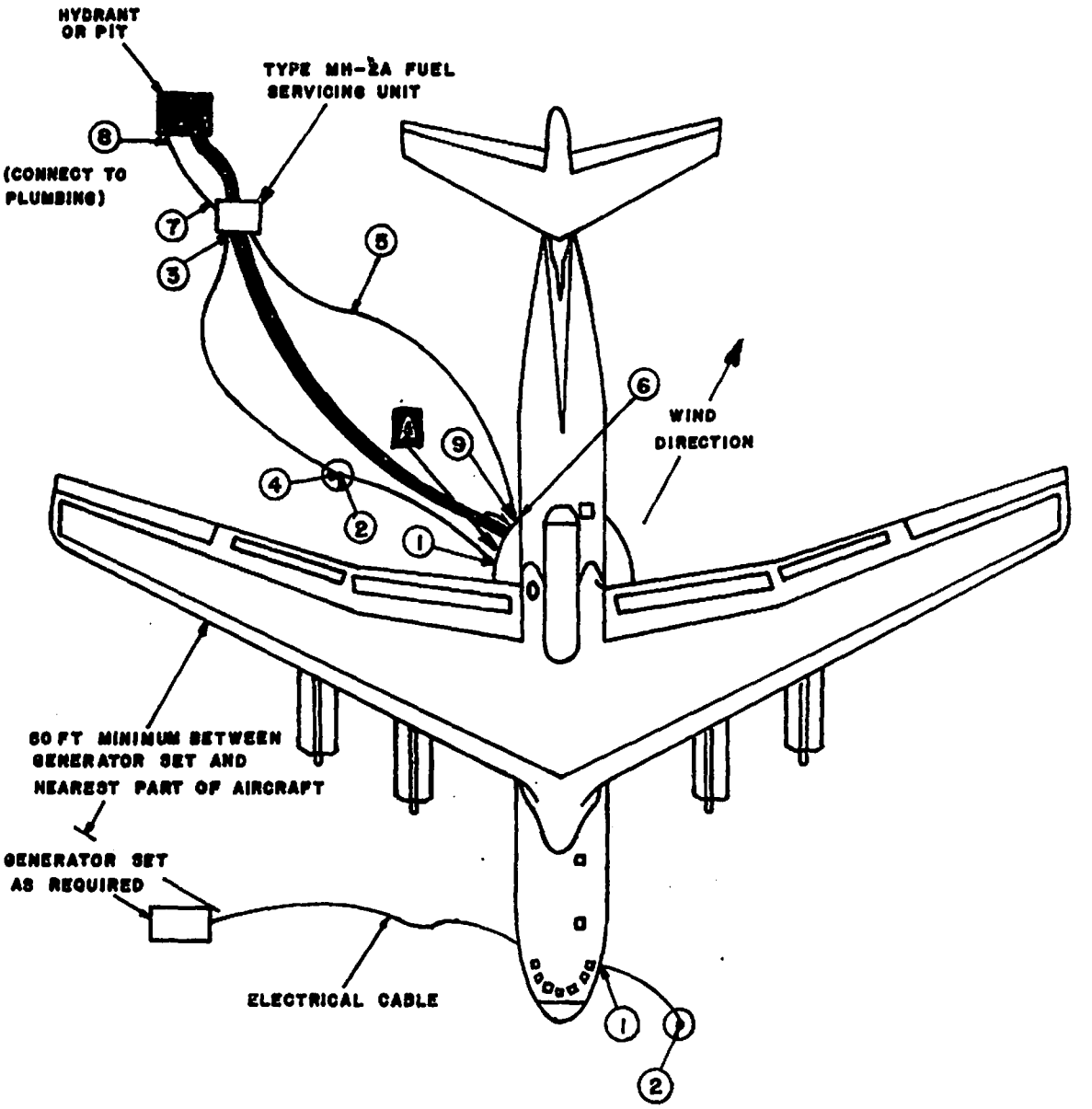

GROUND SEQUENCE

(1) TO (2) AIRCRAFT TO GROUND (2 PLACES)

(3) TO (4) MH-2A TO SAME GROUND AS AIRCRAFT

(5) TO (6) MH-2A TO AIRCRAFT

(7) TO (8) MH-2A TO HYDRANT OR PIT

(9) NOZZLE TO AIRCRAFT BEFORE SPR CAP IS REMOVED

GROUNDING WHEN USING HYDRANT OR PIT (SPR. MANIFOLD FUELING

SUGGESTED HOOKUP FOR FUELING OPERATION

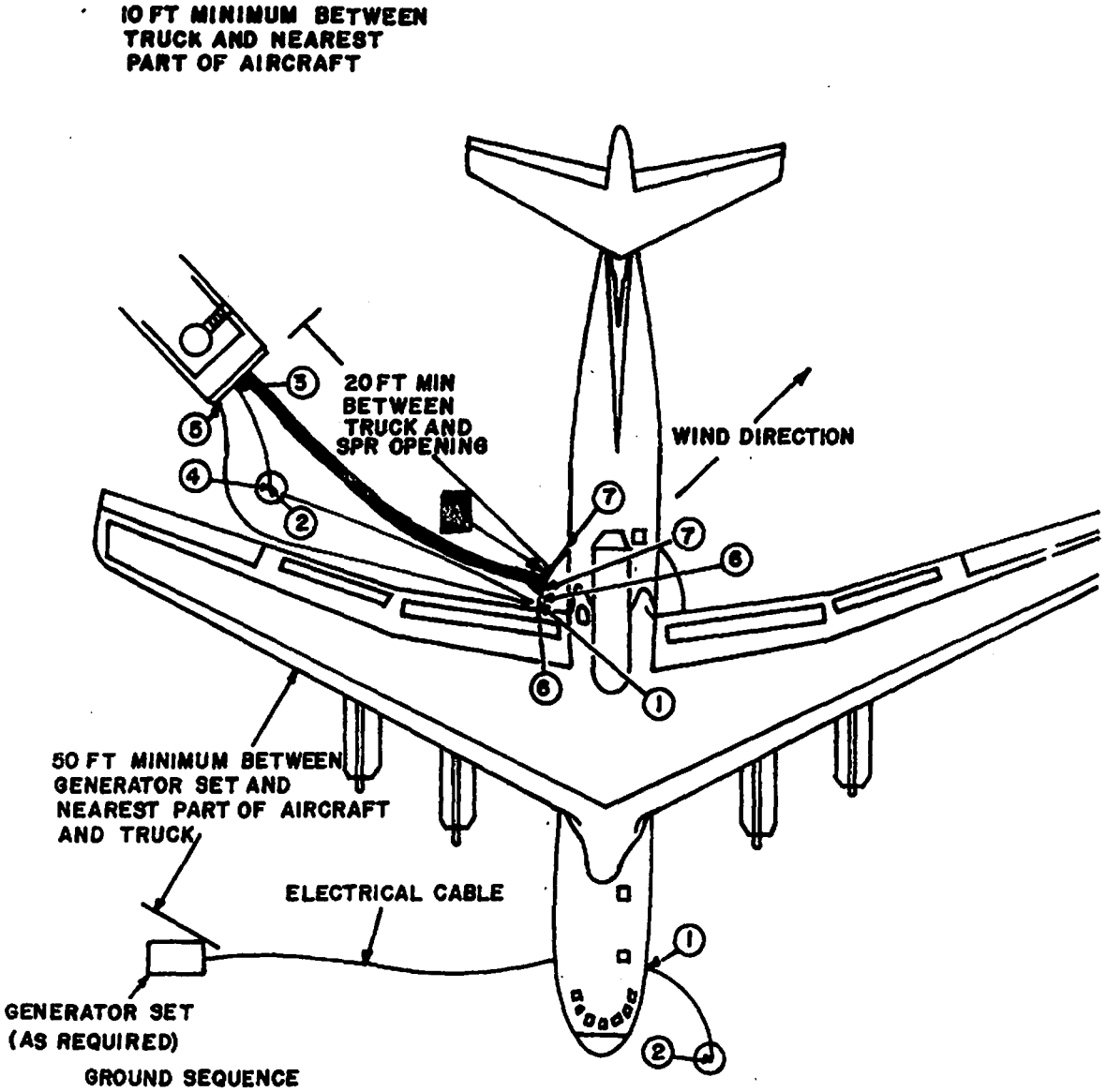

GROUND SEQUENCE

(1) TO (2) AIRCRAFT TO GROUND (2 PLACES)

(3) TO (4) TRUCK OR TRUCK TO SAME EARTH GROUND AS AIRCRAFT

(5) TO (6) TRUCK OR TRUCKS TO AIRCRAFT

(7) SPR HOSE NOZZLE BONDING WIRE TO AIRCRAFT BEFORE SPR FILLER CAP REMOVED

GROUNDING WHEN USING TRUCK (SPR MANIFOLD FUELING)

SUGGESTED HOOKUP FOR FUELING OPERATIONS

SECTION II Electrical System

TABLE OF CONTENTS

Chapter 1

AC POWER - GENERAL

Introduction

The C-141A/B has a parallel AC and DC power system. The system is designed so that:

1. No single failure or probable combination of failures shall cause complete loss of electrical power.

2. System operation and protection shall be as automatic as practicable.

3. External power shall not be required for normal engine start.

The C-141A/B uses a 200/115-volt, 400-hertz, three-phase AC power system as the primary source of electrical power.

In flight, this power is supplied by four 50-kilovolt ampere (KVA) engine-driven generators.

During ground operation, power is supplied by one of three sources: An auxiliary power unit (APU) driven generator, an external power source, or the engine-driven generators.

During inflight emergencies, power is supplied by a 2 KVA hydraulically driven emergency generator.

The four engine-driven generators, the APU generator, and external power are controlled from the flight engineer's panel. Emergency generator operation is automatic, but can be controlled manually from the pilot's instrument panel.

AC Bus Arrangement

The AC bus systems consist of a main AC tie bus, four main AC buses, and two essential AC load systems.

Essential AC load system No. 1 consists of:

Essential AC bus No. 1

Avionics AC bus No. 1

Navigation AC buses No. 1 and No. 2

Isolated AC bus

Isolated avionics AC bus

Emergency AC bus

Transformer-rectifier unit No. 1

Essential AC load system No. 2 consists of:

Essential AC bus No. 2

Avionics AC bus No. 2

Transformer rectifier unit No. 2

AC power is normally supplied by the four main generators operating in parallel through bus tie contactors (BTC) to the main AC tie bus. Main AC buses No. 1 and No. 4 are normally supplied AC power by their respective generators through individual generator line contactors (GLC). Main AC buses No. 2 and No. 3 are normally supplied AC power through individual generator line contactors (GLC) and load monitor relays.

In the event of a generator failure, its respective main AC bus will be supplied AC power from the main AC tie bus through a bus tie contactor (BTC). The load monitor relays for main AC buses No. 2 and No. 3 will automatically OPEN during single generator operation, or if the APU generator is the only source of power. The load monitor relays can be overridden and held closed by means of auto-load disconnect switches, located on the flight engineer's panel.

In the event of a fault on the main AC tie bus, protective circuits in the respective generator systems will automatically open the bus tie contactors (BTC), isolating the AC bus system. In this type of operation, each generator will continue to power its associated main AC bus. In addition, generator No. 1 will power the essential AC load system No. 1, and generator No. 4 will power the essential AC load system No. 2. If generator No. 1 should fail, generator No. 2 will automatically take over and power the Essential AC Load System No. 1; and if generator No. 4 should fail, generator No. 3 will automatically take over and power the essential AC load system No. 2.

The disadvantages of this type of operation are:

(1) If a generator fails, power to its associated main AC bus will be lost;

(2) If both generators on the same side fail, power to one of the essential AC load systems will also be lost. Example: If No. 3 and No. 4 generators fail, power will be lost to main AC buses No. 3 and No. 4 and the essential AC load system No. 2.

The essential AC load system No. 1 can be supplied AC power from any of three sources. The normal source is the main AC tie bus. If the main AC tie bus is deenergized, all bus tie contactors (BTC) OPEN, and the No. 1 generator is operating, it will automatically supply essential AC load system No. 1. If the main AC tie bus is deenergized and No. 1 generator is not operating, No. 2 generator will automatically supply this power.

Essential AC load system No. 2 can be supplied by three sources. The normal source is the main AC tie bus. If the Main AC Tie Bus is deenergized and the No. 4 generator is operating, it will automatically supply this power. If No. 4 generator is not operating, No. 3 generator will automatically supply this power.

Navigation AC Bus No. 1 can be supplied power only from avionics AC bus No. 1. Navigation AC bus No. 2 is normally supplied by avionics AC bus No. 1; however, if nav AC bus pwr relay is deenergized, avionics AC bus No. 2 will automatically supply navigation AC bus No. 2.

The isolated AC bus, isolated avionics AC bus, and emergency AC bus can be supplied by two separate sources. The normal source is the essential AC load system No. 1. If essential AC bus No. 1 is deenergized, the emergency generator will automatically supply power to these buses. In addition, if the essential AC bus No. 1 is energized and the Instrument Power switch on the pilot's instrument Panel is placed to the EMER position, the emergency generator will supply power to these buses.

Chapter 2

DC POWER - GENERAL

Introduction

DC electrical power is normally supplied by two solid-state transformer-rectifier units connected in parallel. The emergency generator furnishes emergency DC power if the normal DC power fails. A battery supplies control and ignition power through the isolated DC bus to start the APU.

Transformer-Rectifier Units

The input to the transformer-rectifier (TR) units is 200/115-volt, 3-phase AC power supplied from the Main AC Power Distribution Center through a single 3-phase circuit breaker. The output of the units will normally be 28 volts DC, with a maximum amperage rating of 200 amperes each. The voltage output of the TR units varies inversely with the magnitude of the load applied to the DC system. Under load conditions of 5 to 200 amperes, the voltage output will vary from 29 to 25 volts.

A transformer-rectifier, which forms an integral part of the emergency generator, provides DC voltage when the emergency generator is operating.

Battery

A 24-volt, 11 ampere-hour lead-acid battery, located in the right underdeck area, can supply power to the isolated DC bus and the isolated avionics DC bus. It is used, primarily, to supply control and ignition power for starting the APU.

The battery switch, located on the flight engineer's electrical control panel, is a two-position, OFF-ON switch. If no other power is available and the switch is placed in the ON position, the battery relay will close and connect the battery to the two isolated DC buses.

DC Bus Arrangement

The DC system buses consist of:

Main DC buses No. 1 and No. 2

Main DC avionics buses No. 1 and No. 2

Isolated DC bus

Isolated DC avionics bus

Emergency DC bus

The main DC buses No. 1 and No. 2 are normally powered by their respective TR units. Each main DC bus is connected to its TR unit by a reverse current relay, which closes automatically when the transformer-rectifier's voltage is 0.7 to 1.00 volt above bus voltage. The reverse current relay automatically removes the TR unit from the bus if the reverse current exceeds certain limits.

A 400-ampere current limiter interconnects the main DC buses and permits either TR unit to supply both main DC buses. The current limiter also serves to separate the main DC buses from each other in the event of a fault on either one. The isolated DC bus and isolated DC avionics bus are normally powered from main DC bus No. 1 through a 325-ampere current limiter and an isolated bus reverse current relay. The current limiter protects the main DC buses against faults on either isolated bus. The isolated bus reverse current relay prevents the emergency generator from supplying power to the main DC buses.

The emergency bus is powered by the isolated DC bus through an emergency bus power relay for normal operation. In the event essential AC bus No. 1 becomes deenergized, this relay will automatically connect the output of the emergency generator to the emergency DC bus.

Emergency DC power is supplied from the emergency generator which incorporates a silicon divide rectifier within the generator housing to produce the DC current. The emergency DC rating is 20 amps continuous or 30 amps for 5 minutes out of every 30 minutes.

Chapter 3

AC POWER GENERATION

Introduction

Four brushless, air-cooled generators, each capable of continuously delivering 50 KVA, provide the AC power required for operation of the electrical and electronic equipment. The generators are mounted on constant speed drive (CSD) units which, in turn, are mounted on the engines.

There are three generators within the main housing: The main generator, an excitation generator, and a permanent magnet generator (PMG). The PMG produces a frequency of 1,600 hertz and approximately 108 volts, which is supplied to the associated voltage regulator and protection panel. PMG power, after rectification and control in the voltage regulator, supplies excitation to the excitation generator. The output of the excitation generator is rectified by diodes, incorporated in the rotor, and connected to the field of the main generator. The output of the permanent magnet generator (PMG) is fed directly to the main protection panel, where part of this output is rectified into DC power for control of the generator system. The rectified DC is then connected to one section of the generator control switch, so when the generator switch is placed to the ON position, this DC power is applied to an underspeed relay in the main protection panel. When the generator is being turned at a speed of at least 5700 rpm, the underspeed relay will close and connect this DC power to two places:

1. To a generator control relay in the protection panel.

2. To the contacts of an undervoltage relay, also in the protection panel.

The generator control relay, when energized, will connect the AC output of the PMG to the voltage regulator. PMG power after rectification and control in the voltage regulator is supplied to the field of the excitation generator. This in turn controls the output of the main generator.

When the voltage output of the main generator reaches a predetermined value, the undervoltage relay will close and connect the rectified DC to a second section of the generator control switch. This section of the generator control switch connects the DC power to the generator line contactor (GLC), causing the GLC to close and connect the AC output of the main generator to the AC power distribution system.

Voltage Regulator

The voltage regulator is a magnetic amplifier which maintains the generator voltage at a preset level under all load conditions. This is accomplis d by comparing any changes which appear in the output voltages with a preset reference voltage. Any difference is applied to correct the amount of excitation applied to the generator field, thereby restoring line voltage to the desired level. No adjustments can be accomplished on the voltage regulator.

Main Protection Panels

Each protection panel provides protection and control of its associated generator. The protection panel gives automatic protection by using the following circuits:

Underspeed	Differential fault
Undervoltage	Neutral current
Overvoltage	Unbalanced current
Reactive bias	Auto parallel

Underspeed

A flyweight actuated underspeed switch is installed in each constant speed drive (CSD) unit. This switch is closed and grounds out the generator control panel until the generator speed reaches 5700 rpm, at which time the underspeed switch opens, allowing the generator to begin operation. This switch will again close if the speed drops below 5400 rpm.

Undervoltage

During normal system operation, the undervoltage relay is energized. If an undervoltage condition should occur, the undervoltage relay will deenergize and apply voltage, through its contacts, to two different time delay relays. One time delay is a 3-second delay; the other is a 6-second delay.

After three seconds, the first time delay relay opens the bus tie contactor and holds it open. If removing the generator from the main tie bus clears the fault that caused the undervoltage condition, the undervoltage relay will reenergize, and the 6-second time delay will be interrupted.

If the fault is not cleared after six seconds, the second time delay relay will open the generator line contactor and cause the generator output to drop to zero.

The bus tie contactor can be reset by turning its respective bus tie switch to the OPEN position. The system can be reset by turning its respective generator control switch to the OFF position.

Overvoltage

The overvoltage circuit has an inverse time delay in which the higher the voltage, the shorter the time it takes to open the generator line contactor and reduce the generator voltage to zero.

Reactive Bias

Reactive bias is a result of parallel operation. During parallel operation, if the current supplied by the controlled generator and the average current of all generators in parallel is not the same, a voltage is developed by the reactive bias circuit. This voltage will either add to or subtract from the reference voltage supplied by the voltage regulator. This will lower the overvoltage trip point of the generator if it is supplying more than its share of the load, or will raise the undervoltage trip point of the generator if it is supplying less than its share of the load.

Differential Fault

A current-sensing transformer is installed around each of the generator ground leads, and an identical transformer is installed around the power leads. Should a differential fault (power lead shorted to ground) occur between these transformers, a differential protection relay will operate the differential lockout relay, causing the generator line contactor to open and generator voltage to drop to zero. Once energized, the differential lockout relay remains energized until the permanent magnet generator (PMG) output is removed. After PMG power has been removed, the differential lockout relay can be reset by depressing the DLR reset button on the main protection panel.

NOTE: The GENERATOR OUT light will come ON and remain ON with the generator switch OFF when a differential fault occurs.

Neutral Current

The neutral current-sensing circuit detects an open phase, a line-to-ground fault, or a line-to-line-to-ground fault during parallel operation. If an abnormal neutral current (unbalanced current between phases) exists in a single generator system, the neutral current relay will energize and remove that generator from operation by using the same actions and sequence as the undervoltage circuit.

If the neutral current problem is on the tie bus, where it affects all four generators, the neutral current circuits will open all four bus tie contactors, putting the electrical system in isolated operation.

Unbalanced Current

During parallel operation, if unbalanced loads occur between the generators, a time delay relay will remove the generator from the tie bus in approximately eight seconds.

Auto Paralleling

The auto paralleling circuit is only used when a generator is placed on the tie bus. The auto paralleling circuit will check the generator, and if its voltage is in phase with the power on the tie bus, the bus tie contactor is allowed to close, and the auto paralleling circuit is no longer used.

NOTE: No paralleling provisions exist for external or AUX generator systems; therefore, paralleling is for the main generators only.

Generator Line Contactor (GLC)

The generator line contactor (GLC), when in the closed position, connects the output of the generator to its associated main AC bus. The GLC is controlled by its respective generator control switch on the flight engineer's control panel.

Bus Tie Contactor (BTC)

The bus tie contactor (BTC) connects the output of its associated generator to the main AC tie bus. The BTC will also connect power from the main AC tie bus to an individual main AC bus, in the event its associated generator should fail. The BTC is controlled by its respective bus tie switch on the flight engineer's panel.

Constant Speed Drive (CSD)

The constant speed drive (CSD) is a hydraulic differential transmission which is driven by the engine accessory gear box. Its purpose is to convert variable engine speeds to constant generator speeds.

The CSD drives a 50 KVA generator at a constant speed. At an input speed of 4,100 rpm to 8,500 rpm, the CSD is capable of driving the generator at a constant 6,000 rpm. The controlled 6,000 rpm to the generator insures a constant frequency of 400 hertz.

The CSD oil supply is contained in a stainless steel tank located on the left side of the engine fan case. This tank is the oil reservoir for both the CSD and the thrust reverser systems. There are two separate supply lines from the tank, one for each system. The CSD supply line is connected to a standpipe inside the oil tank. If an oil leak develops in the CSD system, the standpipe prevents total loss of oil from the tank to preserve a supply of oil for the thrust reverser system operation.

Oil leaving the tank enters the CSD. After being used in the CSD, it is ported through the CSD oil cooler, through a temperature regulating and pressure bypass valve, and back to the oil tank.

To monitor the operating condition of the CSD, a CSD oil temperature indicator and CSD OVERHEAT light is located on the flight engineer's electrical control panel.

The oil temperature indicator is marked in degrees centigrade from minus 50 to plus 200. The indicator is controlled by a temperature bulb in the CSD oil return line between the CSD and CSD oil cooler.

The CSD OVERHEAT light is controlled from two sources. One is a thermal switch, located in the CSD, which will illuminate the overheat light if the CSD oil

sump temperature reaches 179 (±5.5) °C. The second is an oil pressure switch which will illuminate the overheat light if the oil pressure in the CSD drops below operating pressure.

Therefore, light illumination may indicate loss of oil pressure or a CSD overheat condition. The input shaft disconnect is mounted on the input end of the CSD housing. It couples the output drive of the engine accessory gear box with the input hydraulic unit of the CSD. The disconnect is solenoid operated and controlled by a CSD disconnect switch on the flight engineer's panel. The drive may be disconnected anytime the engine is operating by positioning the CSD disconnect switch. Once disconnected, the drive can be reengaged by pulling a reset handle mounted on the housing of the CSD. This can be done only on the ground with the engine stopped, to prevent damage to the disconnect assembly.

The CSD converts variable engine speeds to a constant speed required to drive the generator. This is accomplished, basically, by employing the use of two ball piston hydraulic units within the CSD. An input hydraulic unit is connected to the input drive shaft and an output hydraulic unit to the output drive shaft. Both units are free to rotate independently of each other under static conditions. Under operating conditions, an oil pump within the CSD supplies oil to the two hydraulic units. Through a pumping action upon this oil by the input hydraulic unit, as controlled by a governor, a variable hydraulic pressure is applied to the output ball piston unit. This action results in a connection between the two hydraulic units, converting the variable input speed to a constant output speed.

The control governor assembly consists of a governor flyweight assembly and a reference spring, which are connected to a control valve. The control governor assembly also contains an overspeed-underspeed control. The control governor flyweights are driven through a drive gear by the output drive shaft.

Any off-speed of the output drive shaft will cause the flyweights to reposition the control valve, porting high oil pressure to either the increase or decrease speed side of the stroking piston.

A load biasing solenoid is connected to the governor control valve to change the position of the valve as dictated by either increase or decrease speed signals originating in t..e load controller. The purpose of the load controller is to sense an unbalanced load between its generator and the average load of the generators on the main AC tie bus. The load controller corrects for an unbalanced load by sending appropriate signals to the load biasing solenoid.

The overspeed-underspeed control assembly is designed to accomplish two separate functions. The overspeed section prevents the output speed of the CSD from exceeding 7200 rpm. The underspeed section prevents the generator from connecting to the bus if the output speed is too low.

G E ONLY

During an overspeed condition, the overspeed flyweights will position the overspeed transfer valve. The transfer valve will then port oil to the input hydraulic unit, positioning it for maximum decrease rpm (approximately 5400 rpm). The transfer valve will then be locked in this position until the CSD is shut down.

NOTE

The Sunstrand CSD has a relief valve which prevents overspeed.

The movements of the underspeed flyweights will actuate the underspeed switch. When the CSD speed drops below 5400 rpm, the underspeed switch will close and deenergize the generator. When the speed of the CSD is increased to 5700 rpm, the underspeed switch will open and cause the generator to become energized.

Load Controller

The load controller provides an electric trim to the governor of the constant speed drive to insure proper sharing of the real load during parallel operation of two or more generators. When the loads delivered by each generator in the parallel system are not equal, a signal voltage is developed and applied to each load controller. This signal is of such polarity as to produce opposite effects on the load controllers. This causes the load controller for a high output generator to lower the load on that generator and the load controllers for the low output generators to raise the load on their generators.

Auxiliary Generator

An auxiliary AC generator, identical to the main engine driven AC generators, is installed to supply electrical power for ground operation only. This generator is driven by the auxiliary power unit (APU) and is installed in the forward end of the left wheel well. Operation of the auxiliary generator is essentially the same as the main engine driven generators.

The auxiliary generator is capable of supplying AC power to all aircraft buses except main AC buses No. 2 and No. 3. These buses may be supplied by utilizing the auto-load disconnect switches and manually monitoring the bus loads to prevent overloading.

External AC Power

Power from an external AC source can be supplied to the aircraft during ground operations. External AC power will power all AC buses.

The external power system consists of an external AC power receptacle, located on the forward right side of the fuselage, an external power contactor, a portion of the bus protection panel, an EXTERNAL POWER READY light, and an EXTERNAL POWER ON light.

A control circuit breaker is in the external power receptacle. The circuit breaker protects circuits in the bus protection panel.

A control DC circuit breaker is installed on the main AC power distribution center. It protects the aircraft bus protection panel against ground faults in the external power source.

An indicator light in the external power receptacle goes ON and reads EXT PWR ON when external power is supplying the aircraft buses.

An indicator light labeled EXT POWER, located on the flight engineer's panel, goes ON and reads READY when external power of the proper phase sequencing and minimum voltage is applied to the aircraft.

NOTE: Check that the voltage and frequency are within limits before applying power to aircraft.

Bus Protection Panel

The bus protection panel provides phase sequence and undervoltage protection when the electrical system is supplied from an external power source.

Three-phase voltage from the external power receptacle is rectified to supply DC voltage for operation of other circuits in the bus protection panel. If the phase sequence and the voltage of the three-phase external power is correct, a phase sequence relay will energize and close the external power contactor. If the external power source voltage should drop, the phase sequence relay would deenergize and cause a lockout relay to energize and open the external power contactor.

NOTE: The lockout relay can only be deenergized by completely removing external power from the aircraft.

The panel controls the Bus Tie Contactors to allow the main AC buses to be energized from external, auxiliary, or main generator power. This feature prevents the main AC tie bus from being powered from two separate (non-paralleling) sources.

Emergency Generator

The purpose of the emergency generator is to supply power to operate one set of flight instruments, engine instruments, warning systems, and a limited amount of navigation and communication equipment, in the event all main generators fail.

The emergency generator can supply power to a total of 6 buses: 3 AC buses, and 3 DC buses. These buses are the:

Isolated AC bus

Isolated AC avionics bus

Emergency AC bus

Isolated DC bus

Isolated DC avionics bus

Emergency DC bus

The emergency generator, which is located in Hydraulic Service Center No. 2, has a continuous rating of 2 KVA AC and 20 amperes DC. The generator is driven by a hydraulic motor, which is supplied hydraulic fluid from the No. 2 hydraulic system. Emergency generator operation is automatic, but can be manually controlled by the instrument power switch, located on the pilot's instrument panel. An electrically controlled hydraulic motor control solenoid, energized to the closed position, prevents hydraulic fluid from driving the hydraulic motor. If the emergency bus power relay is deenergized by a loss of power to the essential AC bus No. 1, the hydraulic motor control solenoid is also deenergized. The deenergized solenoid opens a shutoff valve and allows hydraulic fluid to drive the motor and the emergency generator. A flow control valve maintains a constant hydraulic flow to hold generator speed at approximately 12,000 RPM.

A three-position instrument power switch is located on the pilot's instrument panel. The switch positions are OFF, NORM, and EMER. Under normal conditions the switch is set to the NORM position. In this position the switch provides a ground for the emergency bus power relay. When power is available on the essential AC bus No. 1, the emergency bus power relay and the hydraulic motor control solenoid are energized. This prevents the emergency generator from operating. If essential AC bus No. 1 becomes deenergized, the emergency bus power relay will also deenergize and open the hydraulic motor control solenoid. The emergency generator is then automatically activated.

Placing the instrument power switch to the EMER position removes the ground from the emergency power relay, causing the emergency generator to be activated. When the emergency generator is operating, placing the instrument power switch to the OFF position will disconnect the emergency generator from the buses which it is supplying.

When experiencing a loss of normal DC power without a loss of AC power, as indicated by the illumination of the BATTERY light, opening the EMER POWER CONTROL circuit breaker, located on the DC side of the emergency circuit breaker panel, will cause the emergency generator to come ON and supply power to the isolated and emergency DC buses and to the isolated AC buses.

NOTE: The emergency AC bus will remain powered from the normal source at this time.

Chapter 4

FLIGHT ENGINEER'S ELECTRICAL CONTROL PANEL

The control switches, selectors, and indicators necessary to monitor and maintain control of the normal electrical system are grouped on the flight engineer's electrical control panel. The operation of each light, switch, and meter is summarized in this chapter.

ITEM	DESCRIPTION AND FUNCTION
Voltage and frequency meters	These meters and associated selector switches are used to check the voltage and frequency of each phase of any operating generator.
Emergency power test switch	Positioning this switch to TEST causes the emergency generator to be energized but does not connect its output to any buses.
CSD oil temperature gage	The CSD oil temperature gage provides an indication of constant speed drive oil out temperature.
CSD overheat light	When ON, the CSD OVERHEAT light indicates an over-temperature condition or loss of oil pressure in its associated constant speed drive unit.
Generator failure light	The GEN FAIL light, when ON, indicates a mechanical failure in its associated generator.
CSD disconnect switch	The guarded CSD disconnect switch is used to disconnect its associated CSD in the event of a CSD or generator malfunction. NOTE: Once disconnected, a CSD cannot be reconnected except on the ground with the engine stopped.
AC loadmeter	The AC loadmeter provides a continuous indication of the load being supplied by its generator. A reading of 1.0 on the meter corresponds to a 70 KVA load on the generator.
Generator out light	The GEN OUT light, when ON, indicates that an electrical malfunction has occurred and the system protective circuits have operated to deenergize

ITEM	DESCRIPTION AND FUNCTION
	that generator and open its respective generator line contactor.
Generator control switch	Three-position, ON - OFF - TEST, switch. The generator is deenergized and its associated generator line contactor is deenergized in the OFF position. Placing the switch to the ON position energizes the generator and its associated generator line contactor. Placing the switch to the TEST position energizes the generator but does not energize its contactor. NOTE: The generator circuit can be reset by turning the generator control switch OFF, except when the generator has been tripped by a differential fault condition.
Main bus off light	The MAIN BUS OFF light, when ON, indicates its associated main bus is not energized.
Bus tie switch	A two-position, NORMAL - OPEN, switch. In the NORMAL position, the bus tie contactor is energized. In the OPEN position, the bus tie contactor is deenergized.
Auto-load disconnect switches	The two auto-load disconnect switches have two positions: NORMAL and OVERRIDE. These switches can be used to override the auto-load disconnect feature to power the main AC buses No. 2 and No. 3 in the event that three generators are lost in flight or if the APU generator is the only source of power for ground operation.
Power selector switch	A three-position, AUX - OFF - EXT, switch. Positioning the switch to AUX connects the auxiliary generator to the main AC tie bus. Positioning the switch to EXT connects external power to the tie bus. In the OFF position, neither the auxiliary generator nor external power is connected to the tie bus. Also, in the OFF position, with aircraft generators operating, the main AC tie bus will be powered.
External power ready light	When ON, the EXT POWER READY light indicates that external power is of proper

ITEM	DESCRIPTION AND FUNCTION
	phase sequence and minimum voltage.
Emergency AC bus lights	Two indicating lights, labeled EMER PWR and EMER AC BUS, indicate the emergency AC bus source if other than normal. These lights will be ON if the emergency generator is supplying the emergency AC bus.
Essential bus No. 1 lights	The three ESSENTIAL BUS No. 1 lights are labeled: OFF, GEN 1, and GEN 2. The OFF light, when ON, indicates that essential AC bus No. 1 is deenergized. The GEN 1 light, when ON, indicates that generator No. 1 is supplying the essential AC bus No. 1. The GEN 2 light, when ON, indicates that generator No. 2 is supplying the essential AC bus No. 1.
Isolated AC bus lights	The three ISOLATED AC BUS INDICATING lights are labeled: EMER PWR, ISOL AC BUS, and ISOL AC OFF. The EMER PWR light and the ISOL AC BUS light indicate that the emergency generator is supplying the isolated AC buses. The ISOL AC OFF light, when ON, indicates that the isolated AC bus is deenergized.
Essential bus No. 2 lights	The three ESSENTIAL BUS No. 2 lights are labeled: OFF, GEN 3, and GEN 4. These lights serve the same function as do the lights for essential bus No. 1.
Bus power disconnect switches	These switches are used to disconnect generator power from the buses in the event of an inflight emergency. The switches are labeled: Main AC bus No. 2 and 3, Main AC Bus No. 1 and 4, and Essential buses - Isol buses. Each switch has two positions: NORMAL and OFF.
	NOTE: Operation of the disconnect switches is in a priority sequence of increasing importance of the buses. The essential buses disconnect switch will not disconnect the essential buses unless both main AC bus disconnect switches have been actuated. The isol bus disconnect switch will not disconnect the isolated buses unless

ITEM	DESCRIPTION AND FUNCTION
	the main AC and essential buses have first been disconnected. NOTE: Operation of the disconnected switches DOES NOT deenergize the related generators.
DC voltmeter	This meter and associated selector switch is used to check the voltage on related DC buses.
DC loadmeter	The DC loadmeter provides a continuous indication of the load being supplied by its transformer-rectifier. A reading of 1.0 corresponds to 200 amps load on the transformer-rectifier.
Emergency DC bus lights	Two indicating lights, labeled Emer Pwr and Emer DC Bus, indicates the emergency DC bus source is other than normal. These lights will be on if the emergency generator is supplying the emergency DC bus.
Isolated DC bus lights	The four isolated AC bus indicating lights are labeled: Emer Pwr, Isol DC Bus, Isol DC Off, and Battery The Emer Pwr and Isol DC Bus lights indicate that the emergency generator is supplying the Isolated DC Buses. The Isol DC Off light, when ON, indicates that the Isol DC Bus is deenergized. Illumination of the Battery light indicates that that the battery is supplying the Isol DC Buses.

CONDITION	TRIP	TIME	REMARKS	AUX GEN
UNDERVOLTAGE UNDERVOLTAGE	BTC GLC	3 SEC 6 SEC	DOES NOT TRIP IF DUE TO UNDEREXCITATION	 X
OVERVOLTAGE	GLC	VARIABLE	TIME IS INVERSE TO VOLTAGE, MAX. TIME 10 SEC	X
DIFFERENTIAL FAULT DIFFERENTIAL FAULT	GLC BTC	INSTANT 0.4 SEC	 BTC TRIPS IF FAULT IS BETWEEN GLC-BTC	X
NEUTRAL CURRENT	BTC	3 SEC		
UNBALANCED CURRENT	BTC	6 SEC		
UNDERSPEED	GLC	2 SEC	CONTROLLED BY UNDERSPEED SWITCH	X

*AUX GENERATOR PROTECTION

GENERATOR PROTECTION CHART

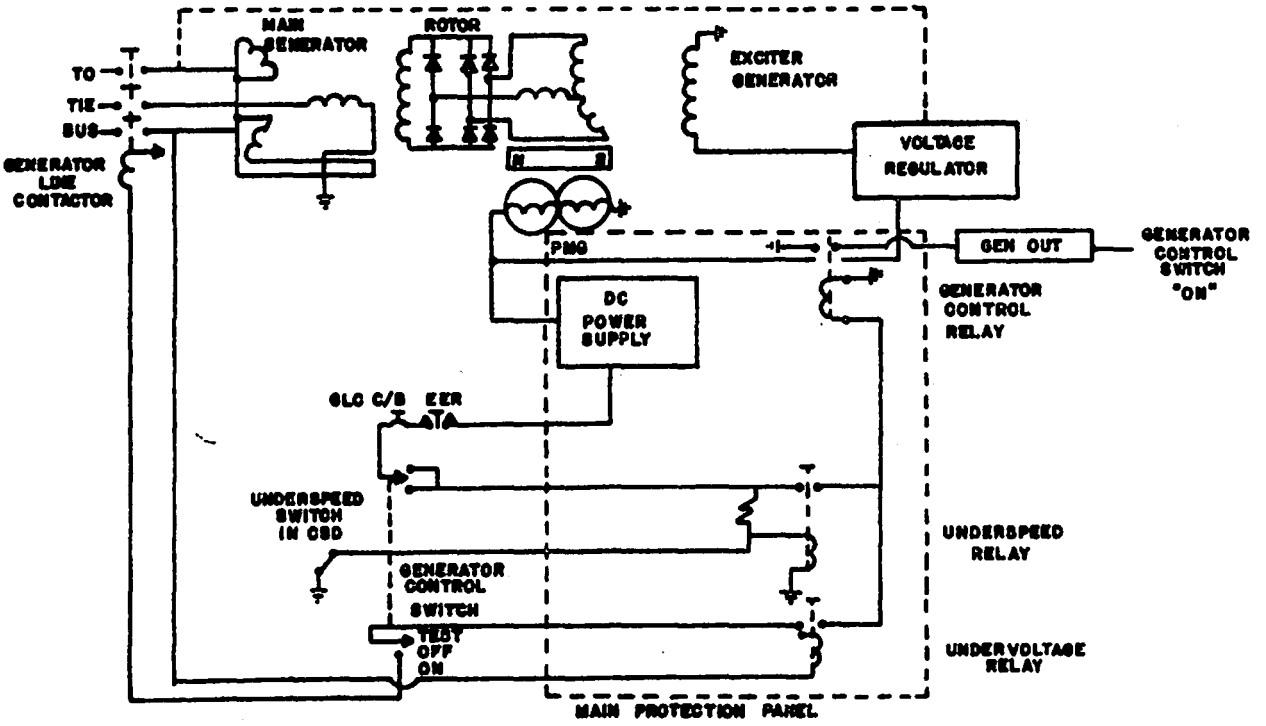

BASIC GENERATOR SCHEMATIC

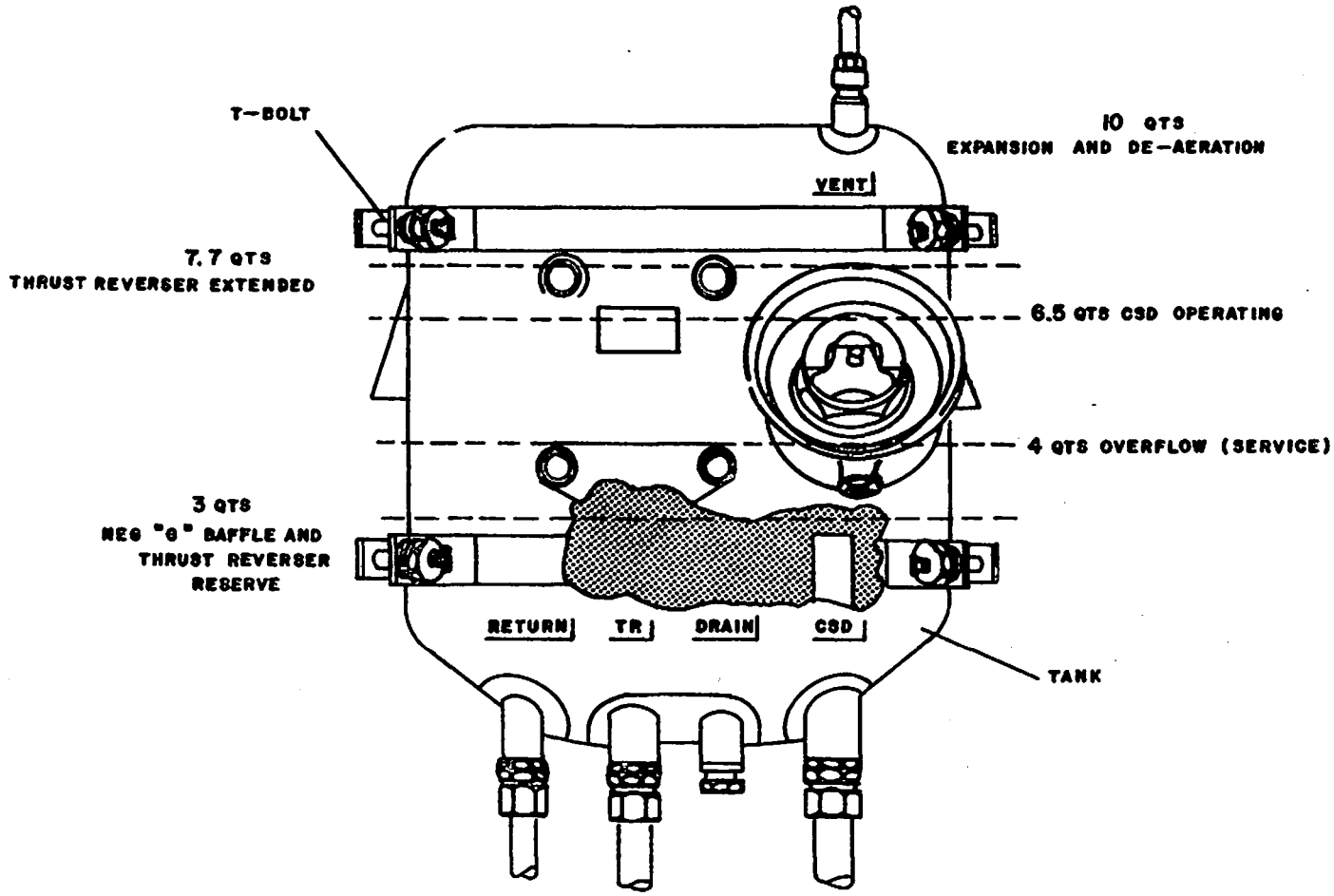
T-BOLT
10 QTS
EXPANSION AND DE-AERATION
VENT
7.7 QTS
THRUST REVERSER EXTENDED
6.5 QTS CSD OPERATING
4 QTS OVERFLOW (SERVICE)
3 QTS
NEG "G" BAFFLE AND
THRUST REVERSER
RESERVE
RETURN
TR
DRAIN
CSD
TANK

CSD OIL TANK

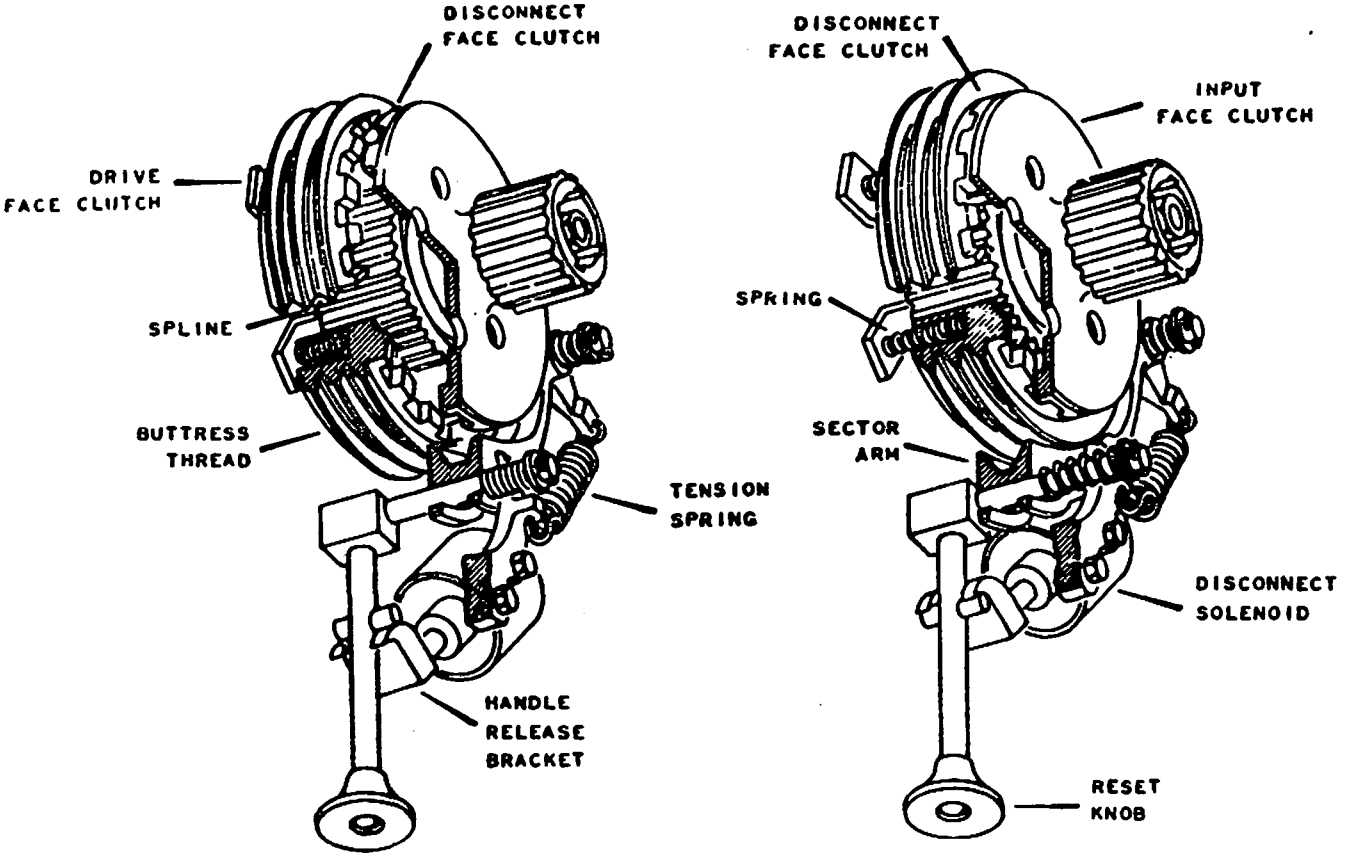

CONSTANT SPEED DRIVE DISCONNECT SCHEMATIC

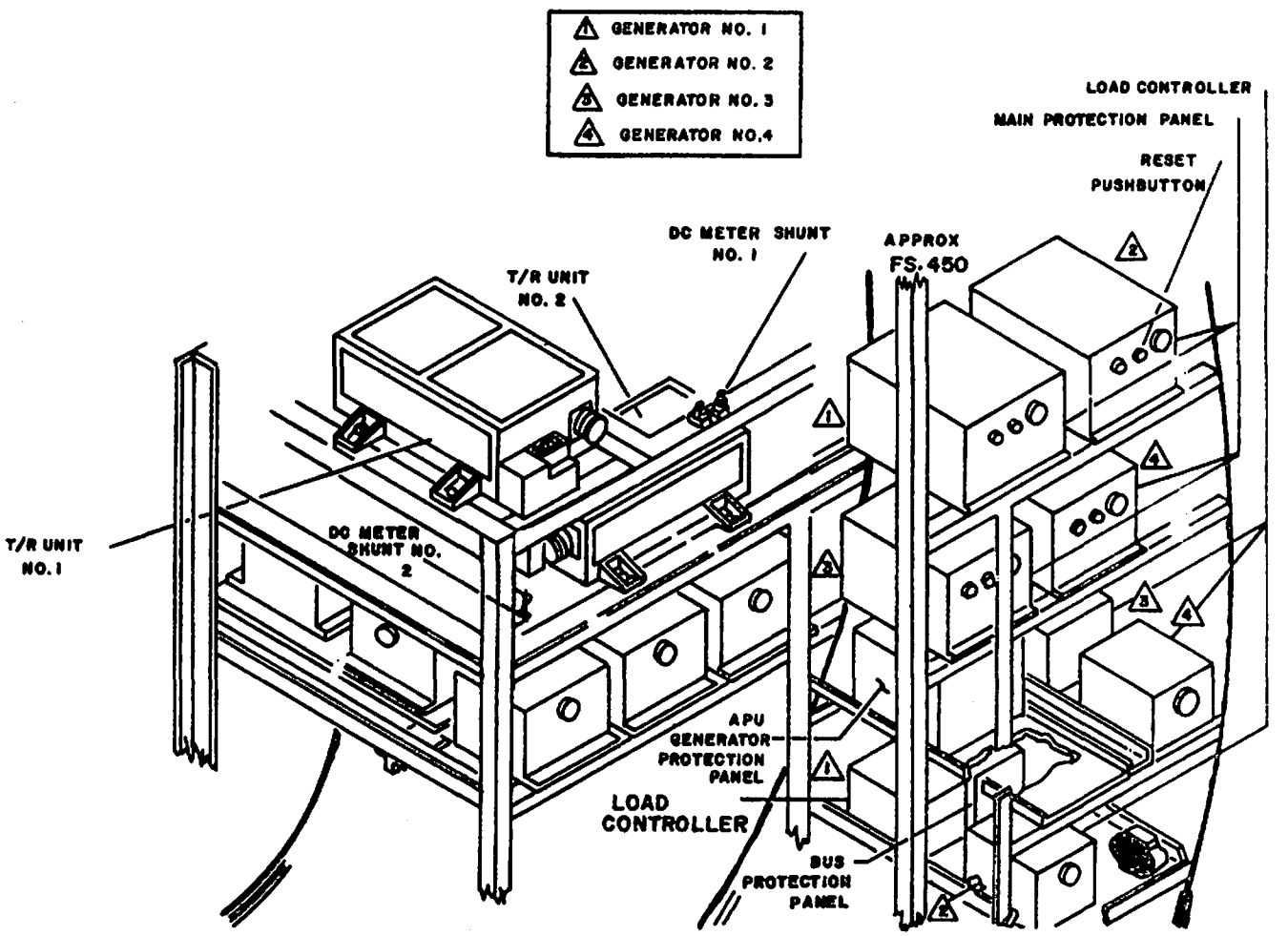

VOLTAGE REGULATORS, CONTROL PANELS AND LOAD CONTROLLER LOCATIONS

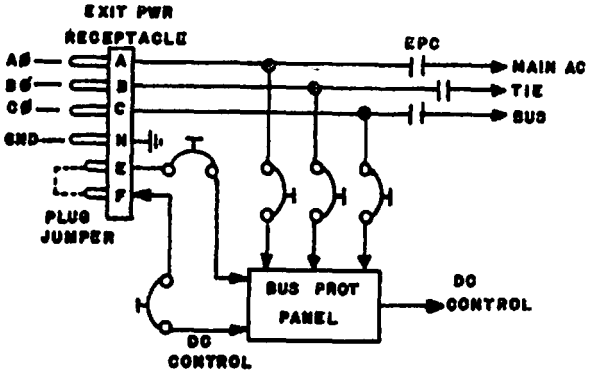

EXTERNAL POWER CONTROL

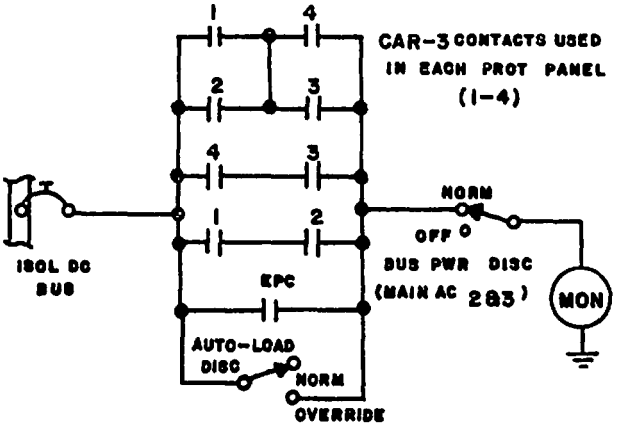

MONITOR RELAY CONTROL

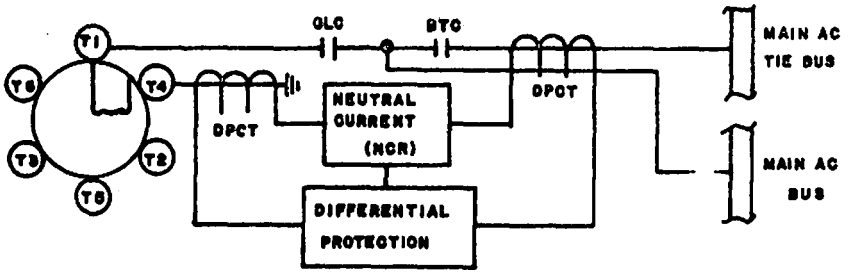

DIFFERENTIAL PROTECTION CURRENT TRANSFORMERS

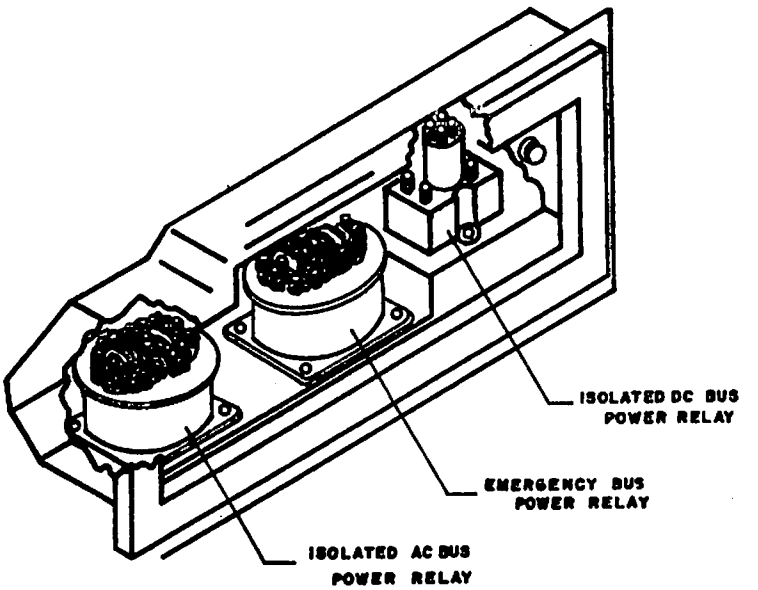

EMERGENCY CIRCUIT BREAKER PANEL

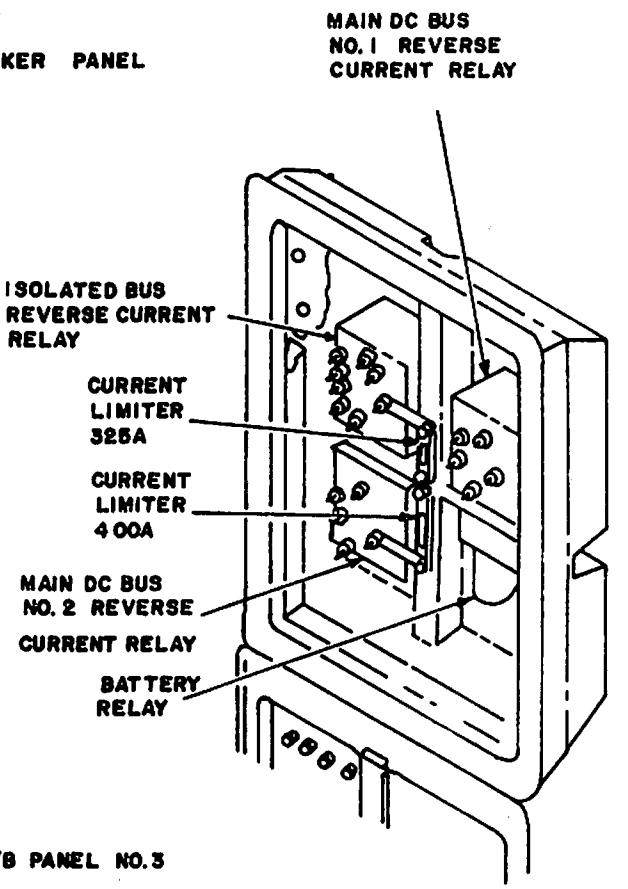

FE C/B PANEL NO. 3

SECTION III INSTRUMENTS

TABLE OF CONTENTS

Chapter 1

INSTRUMENT PANELS

Introduction

To correctly determine how well an aircraft system is operating, you must be able to interpret instrument presentations. If a malfunction is indicated, you must determine if the information presented is an actual condition of the aircraft or incorrect instrument information.

An erroneous instrument reading could cause you to make a faulty decision on the best way to cope with a problem but, on occasions, true instrument readings could be contrary to your natural instincts. You are the determining factor. Abnormal instrument indications may be caused by a defective instrument or aircraft system. You can frequently recognize an abnormal instrument indication by "cross reference" with other instruments. Whenever possible you should not base a conclusion on any one instrument. Instead, you should crosscheck other related instruments before any decision about system conditions is made. Each instrument displays only part of a much larger picture.

Instrument Panels

The flight deck has three major panels -- the main instrument panel, the engineer's instrument panel, and the navigator's instrument panel.

In addition, some instrument testing and adjusting controls are located on the pilot's and copilot's side consoles.

The main instrument panel is divided into three sections. The left and right sides each contain a full set of flight instruments. The center section, containing engine and position instruments, is used by both pilots.

The engineer's instrument panel has an upper and lower section. The upper section has 12 subpanels for instruments and controls. The lower section has an engine instrument subpanel and a fuel system subpanel.

The navigator's instrument panel has several subpanels. Most of these subpanels are devoted to various navigational aids. However, three instruments covered in this section are mounted here. These are an altimeter, the true airspeed indicator, and a clock.

Panel and Instrument Lighting

All instrument and panel lighting is controlled by toggle switches and rotary switches mounted on the overhead panels. The instruments are integrally lighted, using AC power provided by lighting stepdown transformers located behind each rotary switch. The lighting transformers are powered by the Essential AC Buses.

Instrument Types

All instruments are front mounted. Either a clamp-type or a bezel-type mounting is used.

The C-141 has two types of instruments. Most are the conventional dial-type indicators. However, the C-141 also has vertical scale tape indicators (VSI). On these indicators, a tape, moving vertically past an index, shows the desired indication.

Instrument Markings

On some instruments, limit and range markings are provided. The conventional colors are used -- red for limits, green for normal operation, and yellow for caution. On instruments with range markings, a white index marker, partly on the cover glass and partly on the instrument case, indicates if the cover glass has slipped.

Chapter 2

PITOT-STATIC SYSTEMS

Introduction

Two independent pitot-static systems provide pressures to operate the central air data computers (CADC), flight data recorder, two altimeters, and an airspeed indicator. These pressures are picked up by four pitot-static tubes, two on each side of the fuselage, mounted just aft and slightly above the crew entrance door.

Pitot-Static Tubes

A pitot opening and a static opening are in the head of each pitot-static tube. The lower tubes supply both pitot and static pressures. The upper tubes supply static pressure only as the pitot ports are plugged.

The static system is a balanced static system. The static vents of the upper tube on one side of the aircraft are connected to the static vents of the lower tube on the opposite side of the aircraft. This arrangement provides stable static pressure regardless of crosswinds, slipping or skidding of the aircraft.

Pilot's Pitot-Static System

The lower left and upper right pitot-static tubes form the pilot's (or No. 1) pitot-static system. This system furnishes pitot and static pressures to the No. 1 CADC only.

Copilot's Pitot-Static System

The upper left and lower right pitot-static tubes form the copilot's (or No. 2) pitot-static system. The copilot's system furnishes pitot or static pressures directly to the No. 2 CADC, flight data recorder, navigator's and engineer's altimeters, and the pilot's standby airspeed indication.

Pitot-Static Systems Drains

Two drain boxes, one on each side of the fuselage, and internally mounted just below the pitot-static tubes, permit access to capped drain lines which can be used for moisture drainage from the tubes. Two capped drain lines, located under each CADC, permit drainage of the rest of the systems.

Two manual shutoff valves are installed in the copilot's (No. 2) system. They are used to isolate a portion of the system in the event of a leak. The valves are in the right-hand underdeck area, just forward of the crew's latrine, and can be reached through an access door in the floor near the engineer's station. The shutoff valves are normally open. When both valves are closed, the flight data recorder, and the engineer's and navigator's altimeters are isolated from

the system. Pitot and static pressure will still be available to the No. 2 CADC and the pilot's standby airspeed indicator.

Pitot-Static System Anti-Icing

Anti-icing of the pitot-static tubes and masts is provided by 115-volt, 400-hertz, single phase AC powered heating elements. Each pitot-static tube contains two anti-ice heating elements. One is in the tube head, to prevent ice from covering the pitot and static vents. The other heating element is in the tube mast and prevents ice buildup on the mast.

All the heating elements are powered by the Essential AC Busses except the pilot's pitot-static head heater elements. The pilot's pitot-static head heater elements are powered by the Emergency AC Bus and will keep the No. 1 system pitot-static vents open when operating with only emergency power available.

The anti-icing systems are controlled by two OFF-ON switches on the pilot's overhead panel.

A HTR FAULTED light above each switch will illuminate if a power loss should occur in either head heating element and the switch is ON. In addition, a PITOT HEAT light on the annunciator panel and both master CAUTION lights will illuminate.

Standby Instruments

The instruments operating on direct pitot and/or static pressures (not connected through a CADC) are the pilot's standby airspeed indicator and the navigator's and engineer's altimeters.

The pilot's standby airspeed indicator is mounted on the pilot's instrument panel. The pilot's instrument is the conventional type, but only one-half the size of a conventional airspeed indicator. It is used only if the vertical scale flight instruments have malfunctioned.

The navigator's and engineer's altimeters are also of the conventional type and can be adjusted by using the knob and barometric scale provided on each altimeter. The pilot also has a standby compass mounted forward of the pilot's overhead panel.

Total Temperature Indicators

There are two total temperature indicators. One is located on the pilots' center instrument panel and one is on the engineer's instrument panel. They indicate total temperature in degrees centigrade. Total temperature is defined as ambient air (outside) temperature plus ram effect.

The total temperature indicators use 115-volt AC power from the Main AC Bus No. 1. Both indicators are protected by a single circuit breaker labeled TOTAL TEMP IND. A power-off mechanism displays the word OFF through a window in the face of the indicator, should electrical power be lost.

A total temperature probe is on each side of the fuselage, below the pilot's windows. Each temperature probe contains two temperature sensing elements. Probe No. 1 is on the left side and has one sensor connected to the engineer's total temperature indicator and the other connected to CADC No. 1. Probe No. 2 is on the right side of the fuselage and has one sensor connected to the total temperature indicator on the center instrument panel. The second sensor is connected to CADC No. 2.

Each temperature probe has a 115-volt AC deicer element which is energized by a switch on the pilots' overhead panel, labeled TEMP PROBE DEICE.

The No. 1 probe deicer element is powered by Essential AC Bus No. 1. No. 2 probe deicer element is powered by Essential AC Bus No. 2.

NOTE: There is no warning for a deicing system failure.

Chapter 3

CENTRAL AIR DATA COMPUTERS

Introduction

Two complete and independently operated Central Air Data Computers (CADCs) are installed in the C-141 to supply primary flight information to the pilot's and copilot's Vertical Scale Flight Instruments (VSFI). They also provide control and warning information to the Automatic Flight Control System (AFCS), air conditioning systems, elevator artificial feel system, rudder pressure reducers, overspeed warning system, stall warning system, rudder pressure warning, and navigator's true airspeed indicator.

Pitot-static pressures, from the aircraft pitot-static systems, and temperature information, from the total temperature probes, are supplied to each CADC. The CADCs transform these primary input variables into electrical servo signals representing true airspeed, calibrated airspeed, Mach number, pressure altitude, and vertical velocity.

CADC No. 1 receives pitot-static pressures from the pilot's system and temperature information from a temperature sensor mounted in the left total temperature probe. The electrical signal outputs are amplified and displayed on the pilot's primary flight instruments and the navigator's true airspeed indicator (if selected). Electrical power is supplied by the 115-volt, 400-hertz Emergency AC Bus. A circuit breaker, labeled CADC No. 1, provides power circuit protection. There are no control circuits, and the system is in operation whenever the Emergency AC Bus is powered.

CADC No. 2 has the same power requirement, but power is supplied from the Navigation AC Bus No. 2. Whenever power is applied to Navigation AC Bus No. 2, the system is in operation. Circuit protection is supplied by a circuit breaker labeled CADC No. 2. Pitot-static inputs for CADC No. 2 are provided by the copilot's system. A temperature sensor in the right total temperature probe provides temperature information. Electrical signal output is displayed on the copilot's primary flight instruments and the navigator's true airspeed indicator (if selected).

Both CADCs are located on the underdeck equipment racks. CADC No. 1 is on the left side in the electronic equipment area, and CADC No. 2 is on the right side of the center equipment rack.

Testing

On the front panel of each CADC is a push-to-test switch and four malfunction warning lights. The warning lights are labeled Hp (pressure altitude), V_t (true airspeed), V_c (calibrated airspeed) and M (Mach). Monitor circuits within the CADCs will sense malfunctions and illuminate one or more warning lights, depending on which circuit has malfunctioned.

Actuating the push-to-test button will drive the CADC through a self-test cycle. The moment the test cycle starts, all four warning lights should illuminate.

The lights will not go out until the preset values are reached. The time limit for self-testing is 150 seconds, at which time all four warning lights should be OUT. Should a light remain ON, a malfunction is indicated in that circuit. Readout of the preset values will be displayed on the corresponding primary flight instruments. In addition, a CADC INOP light will be displayed on the annunciator panel, and both master CAUTION lights will illuminate.

In addition to the test switches on the CADC, there is a test switch on each side console. These switches have three positions: SELF TEST, NORMAL, and MON TEST.

The test switch for No. 1 CADC is on the pilot's side console, and the test switch for No. 2 CADC is on the copilot's side console.

The SELF TEST position is used for normal testing of the system, and this position corresponds to the push-to-test switch on the CADC front panel. When the switch is held to the SELF TEST position, the CADC reacts and drives the vertical scale flight instrument to preset test values within 150 seconds. These values are:

Altitude	50,000' ± 110'
KCAS	225 knots ± 3.5
Mach	.92 ± 0.015
Navigator's TAS	527 knots ± 5

During the test cycle, the vertical velocity indicator will indicate 20,000 feet per minute climb.

As the Mach indicator passes .3 Mach, the EJECTOR ON light on the flight engineer's environmental panel will go OUT. An audible aircraft overspeed warning will be heard in the headsets as Mach 0.825 is reached.

Throughout the entire test cycle, flags will appear on the Mach, on the calibrated airspeed, and on the altitude indicators. The CADC INOP lights on the annunciator panel will come ON, and both master CAUTION lights will illuminate.

The test cycle is complete when the vertical velocity indicator returns to zero. The switch is then released, and the CADC system will return to normal mode of operation.

Holding the switch in MON TEST (Monitor Test) will test the CADC monitor circuits. This is done to assure the monitor circuit will operate at minimum prescribed values. The monitor circuits normally sense mechanical or electrical malfunctions within the CADC and trigger warning signals which warn the pilots of the malfunctions. During monitor test, flags should appear in the Mach and calibrated airspeed instruments. The CADC INOP light will illuminate on the annunciator panel, and the three warning lights on the front panel of the respective CADC will come ON (Hp [pressure altitude] light will not illuminate). In addition, the master CAUTION lights will illuminate.

Releasing the switch will return the CADC to normal mode of operation. All CADC test switches are interlocked through the touchdown relays to prevent testing the CADCs in flight.

4E-101

tachometer generator is driven by the front accessory drive and routes the wires through the inlet guide vanes. The N_2 tachometer generator is driven by the main accessory drive.

As the engine speed changes, a variable signal is developed by the tachometer generator, fed to the converter unit, then to the indicator to move the vertical tape. The tape is calibrated from 0 to 110 percent.

Again, 115-volt, 400-hertz, single phase AC power is supplied by Essential AC Bus No. 2. These indicators use the same four circuit breakers as the EGT and fuel flow indicators.

Fuel Flow Indicators

Two four-channel indicators are installed, one at the pilot's and one at the engineer's position. A transmitter is mounted on the forward right side of the low compressor case.

Fuel flowing through the transmitter creates a signal, which, after being amplified by the converter unit, positions the vertical tape. The tape is calibrated from 400 to 16000 pph.

Power supply and circuit breaker protection is the same as for the two preceding instruments.

Engine Pressure Ratio Indicators

Two four-channel indicators are used in the engine pressure ratio indicating (EPR) system. These indicators show the ratio of engine turbine exhaust total pressure to compressor inlet total pressure. The EPR reading is used as a measure of engine thrust.

The converter-transmitter for each indicator is mounted in the engine pylon. An inlet pressure probe is mounted on the left side of each plyon. Six exhaust pressure probes are mounted in the exhaust of each engine. Changes in pressure are sensed by these devices and transmitted to the indicator. The EPR indicator moving tape is marked from 1.0 to 2.3.

The 115-volt, 400-hertz, single-phase AC power, required by the EPR indicators, is supplied by the Isolated AC Bus. There is an EPR circuit breaker for each engine.

VSEI Power OFF Warning

Each of the moving tapes in the VSEI indicators has a section of the tape, colored red, which will come into view at the top of the indicator column should there be a power loss to that indicating system. The word OFF is printed on the red section of tape. With normal power to the indicator, this red portion of the tape will be out of view.

Engine Vibration Indicators

Four vertical-scale type indicators, located on the flight engineer's lower panel, supply indications of engine vibration and aid in isolation of engine vibration. A vibration filter selector switch and an indicator pickup selector switch control monitoring on all four indicating systems. There are two vibration sensors on each engine: One on the forward end located on the left side of the compressor section, and one on the bottom of the turbine section. The sensors are monitored one at a time, depending on switch position. The vibration indicator registers the average vibration displacement on a zero-to-five MIL scale.

The vibration sensing system is capable of sensing both high and low frequency vibrations. The HI-LOW vibration filter selector switch is spring-loaded to the low position; in this position the amplitude of the total frequency range (HI & LOW) of vibration is presented on the indicator. Positioning the filter switch to HI allows only the high frequency vibration to be presented on the indicator. The pickup selector switch is a two-position switch. It remains in the desired position for either the FWD or AFT sensor. The PUSH-TO-TEST Switch is used to check continuity of the wiring and vibration sensors. When the switch is actuated, the indicator pointer should move to approximately 3.5 mil.

The vibration indicators use 115-volt, 400-hertz, single phase AC power from the Isolated AC Bus. The pickup selector circuits require 28-volt DC power from the Isolated DC Bus to operate the pickup selector relay.

Chapter 6

INSTRUMENT SYSTEMS

115-Volt AC Instruments

APU EGT Indicator

The APU exhaust gas temperature (EGT) indicator is located on the engineer's panel. The thermocouple-type sensor is located in the APU exhaust. Power for this indicator comes from Essential AC Bus No. 2. A power-off flag in the center of the instrument is visible anytime power is not present at the indicator.

Oxygen Quantity Indicators

A 25-liter liquid oxygen quantity indicator is located on the copilot's side console. This is a capacitance-type indicator in which the indication is not affected by changes in density due to temperature variations. This indicator receives 115-volt AC power from the Essential AC Bus No. 2.

Two 75-liter liquid oxygen quantity indicators form part of the troop oxygen system. They are located on the troop oxygen panel at station 688. These two indicators are also of the capacitance type. Power for these indicators is obtained from two separate buses. Indicator No. 1 is supplied by Essential AC Bus No. 1, and Indicator No. 2 is supplied by Essential AC Bus No. 2.

All three liquid oxygen quantity indicators have a push-to-test button located alongside the indicator. Depressing the test button causes the indicator to move counterclockwise, as an operational check. If the indicator is driven far enough towards empty (2.5 liters crew system - 7.5 liters troop system), the LOW OXYGEN QUANTITY WARNING LIGHT will go ON.

Fuel Quantity System

The fuel quantity system provides both individual tank readings and total fuel quantity. There are ten tank indicators and one total fuel indicator. All indicators are located on the engineer's fuel management panel.

The fuel quantity indicators use capacitor-type tank units and therefore measure fuel quantity in pounds rather than in gallons.

Each tank system contains the tank units, a density compensator, and an indicator.

The system is essentially a bridge circuit which is unbalanced by the addition or subtraction of fuel in the tanks. Signals created by this unbalance are amplified within the indicator to power the indicator motor. As the indicating pointer reaches the proper fuel quantity, reading the bridge is again balanced and motion stops until the next fuel level change.

The total fuel quantity indicator is connected to a potentiometer in each of the tank indicators. Whenever the tank indicator motor responds to a change in fuel level, it also changes the potentiometer value, which in turn results in a change in total fuel quantity. If a tank indicator should become inoperative, the value of that potentiometer is still in the totalizer circuit and is affecting the total fuel quantity reading.

Power requirements for the fuel quantity indicating systems are 115-volt, 400-hertz, single phase AC power. The main tank indicators are supplied AC power from the Essential AC Bus No. 1 through four circuit breakers on the engineer's circuit breaker panel. The totalizer, auxiliary tanks No. 1 and No. 4, and LH extended range indicators are supplied by the Main AC Bus No. 1 through circuit breakers on the engineer's circuit breaker panel.

The No. 2 and No. 3 auxiliary tanks and the RH extended range indicators are supplied by Main AC Bus No. 4 through three circuit breakers on the engineer's circuit breaker panel.

A push-to-test button is located next to each fuel quantity indicator, except the total fuel indicator. Depressing the switch causes the indicator to drive towards zero. Each fuel quantity push-to-test button will also cause the fuel totalizer to rotate towards zero. When the switch is released, the fuel quantity indicator and the fuel totalizer will return to the proper fuel quantity reading. This is an operational check and not an accuracy check.

26-Volt AC Instruments

Fuel Pressure Indicator

There is one fuel pressure indicator on the engineer's fuel management panel. The transmitter for this indicator is located in the center wing dry bay area. The fuel pressure indicator can be used to ground check the output of individual fuel booster pumps by properly positioning the fuel crossfeed and separation valves.

Power for this indicator is supplied by 26-Volt AC Bus No. 2.

Oil Pressure Indicators

The four oil pressure indicators are located on the engineer's engine instrument panel. The pressure transmitters are mounted on the main accessory section of each engine. Power for No. 1 and No. 4 indicators is supplied by 26-Volt AC Bus No. 1, and for No. 2 and No. 3 indicators by 26-Volt AC Bus No. 2.

Brake Pressure Indicators

Two brake pressure indicators are located on the pilots' center instrument panel. One indicator shows normal brake system pressure, and the other shows emergency brake system pressure. Operation of these indicators is dependent on the position of the brake selector switch. The proper indicator will show the pressure of the system selected.

The transmitters for these two indicators are located under the floor near the control columns.

The normal brake pressure indicator is powered by 26-Volt AC Bus No. 1, and the emergency brake pressure indicator by 26-Volt AC Bus No. 2.

Hydraulic Pressure Indicators

There are three hydraulic pressure indicators on the engineer's panel. They show Hydraulic System No. 1, No. 2, and No. 3 pressures. The transmitters for these indicators are located in their respective hydraulic system service centers.

The No. 1 and No. 3 system indicators are powered by 26-Volt AC Bus No. 1, while the No. 2 system indicator is powered by 26-Volt AC Bus No. 2.

Spoiler Position Indicator

The spoiler position indicator is a dual-pointer indicator located on the pilots' center instrument panel. The "L" and "R" pointers show the CLOSED and GRD positions of their respective wing spoilers. The transmitters are in the wings and are driven by the inboard spoiler drive tubes.

In the center of the spoiler position indicator is a window that shows either an UNLKD or LOCKED indication. This portion of the indicator is operated by the spoiler actuator limit switches.

Power for the spoiler position indicator pointers comes from the 26-Volt AC Bus No. 1. Power for the position window comes from the Main 28-Volt DC Bus No. 1.

Manifold Bleed Air Pressure Indicator

The manifold bleed pressure indicator is located on the engineer's environmental panel. The transmitter for this indicator is located in the wing manifold at a tee connection, and it receives pressure from both sides of the isolation valve.

The power for this indicator comes from the 26-Volt AC Bus No. 2.

Regulated Bleed Air Pressure Indicator

The regulated bleed air pressure indicator is a dual pointer indicator. The "L" and "R" pointers show the pressure within their respective air-conditioning systems. The indicator is located on the engineer's panel. The pressure probes are located in the primary heat exchanger outlet air ducting.

Power for this indicator is supplied by 26-Volt AC Bus No. 1 ("L") and 26 Volt AC Bus No. 2 ("R").

-- .olt DC Instruments

Engine Oil Temperature Indicators

The four engine oil temperature indicators are located on the engineer's engine instrument panel. The temperature sensors are located downstream of the oil filter in the pressure passage. They sense the temperature of the oil going to the engine bearings.

The DC power for No. 1 and No. 4 indicators is supplied by Main DC Bus No. 1, while No. 2 and No. 3 indicators are powered by Main DC Bus No. 2.

CSD Oil Temperature Indicators

The four constant speed drive (CSD) oil temperature indicators are located on the engineer's panel. The temperature sensors measure the temperature of the oil as it leaves the CSD.

Power for No. 1 and No. 4 indicators is supplied by Main DC Bus No. 1, and for No. 2 and 3 indicators by Main DC Bus No. 2.

The engine oil temperature indicators and the CSD oil temperature indicators share the same circuit breakers on the engineer's circuit breaker panel.

Fuel Temperature Indicator

The fuel temperature indicator is located on the engineer's fuel management panel. Near the indicator is a switch marked: OUTBD and INBD. The temperature sensors are located in No. 1 engine feed line and in No. 2 engine feed line. If OUTBD is selected, the indicator shows the temperature of the fuel going to No. 1 engine, while the INBD position shows No. 2 engine fuel temperature.

Power for the fuel temperature indicator is furnished by Main DC Bus No. 1 through No. 1 engine CSD and engine oil temperature circuit breaker.

Primary Heat Exchanger Temperature Indicators

The two primary heat exchanger temperature indicators are located on the engineer's panel. They show the temperature of the left and right wing bleed air after it has passed through the heat exchangers. The temperature bulbs are located in the systems downstream from the heat exchangers.

The left-hand indicator is supplied power by the Isolated DC Bus, and the right hand indicator by the Main DC Bus No. 2. In the event of power failure on either bus, the applicable emergency pressurization switch on the emergency power circuit breaker panel can be placed to the EMERG position. Now power will be supplied to the indicators by the Emergency DC Bus.

Cargo Compartment Temperature Indicator

The cargo compartment temperature indicator is mounted on the engineer's panel. The temperature sensor is located in the cargo compartment temperature control unit installed in the aft upper deck (hayloft), wherein a fan draws cargo compartment air over it.

Power for this indicator comes from Main DC Bus Nr 2.

Flap Position Indicator

The flap position indicator is located on the pilots' center instrument panel. The transmitter is driven by the flap drive gearbox. Calibration is from UP (zero percent) to DOWN (100 percent) with an increment at each 10 percent.

The wing flap indicator is supplied 28 volts of DC power by the Main DC Bus No. 1.

Landing Gear Position Indicators

The three type C-1 landing gear position indicators are located on the pilots' center instrument panel above the landing gear lever. A miniature wheel and tire indicate that the gear is DOWN; an UP marker indicates that the gear is UP; while a black and yellow striped flag indicates that the gear is not up or locked. Limit switches actuated by the gear movement operate the indicators.

Power is furnished by the Isolated DC Bus.

Bogie Position Indicators

Two type C-1 bogie position indicators are on the pilots' center instrument panel. The miniature wheel and tire indicate that the associated bogie is in position for landing. At all other times, a black and yellow striped flag is visible to warn the pilot. Limit switches, actuated by bogie beam movement, operate these indicators.

The Isolated DC Bus powers the bogie position indicators.

Trim Position Indicators

The horizontal stabilizer trim position indicator is mounted on the pilots' center instrument panel. It is calibrated in degrees of stabilizer travel for aircraft nose-up and nose-down. The transmitter is mounted in the empennage. Power is supplied by the Main DC Bus No. 1.

The aileron trim position indicator on the pilots' center instrument panel is calibrated in degrees for lower left wing and lower right wing. The transmitter is part of the aileron trim actuator. Power is furnished by Main DC Bus No. 1.

The rudder trim position indicator also is on the pilots' center instrument panel. It is calibrated in degrees for nose left and nose right. The transmitter is part of the rudder trim actuator. Power comes from the Main DC Bus No. 1.

Miscellaneous Instruments

Clocks

Four 8-day clocks are provided and are located on the pilot's, copilot's, engineer's and navigator's panels. These are spring-operated clocks. They are wound by using the knob in the lower left corner. A sweep second hand and minute totalizer are provided; both are controlled by successive depressions of the START-STOP-RESET knob in the upper right corner.

Accelerometer

The self-contained accelerometer is located on the pilot's panel. The dial is calibrated from -2 to +4 Gs. One pointer indicates continuously the vertical "G" forces on the aircraft. The other hands indicate the maximum plus and minus vertical "G" forces exerted until they are reset by the knob in the lower left corner.

Cabin Altitude and Differential Pressure Indicators

There are two of these indicators, one on the copilot's panel and one on the engineer's panel. One pointer indicates cabin pressure altitude in feet, and the other pointer indicates the pressure difference between aircraft and cabin altitudes in psi.

Cabin Rate of Climb Indicator

The cabin rate of climb indicator is located on the engineer's panel. It indicates the rate of pressure change in feet per minute as cabin altitude is moved up or down.

Direct Pressure Indicator

Each Hydraulic Service Center has a direct pressure reading indicator for system pressure. In addition, Hydraulic Service Center No. 3 has a direct pressure indicator for each of the two 400-cubic-inch accumulators and the APU surge accumulator. These indicators are mechanical instruments and require no electrical power.

Chapter 7

AUTOPILOT

Introduction

The autopilot provides the means by which the aircraft is controlled automatically in flight. The autopilot can guide the aircraft to the runway for landings. The action of the autopilot is smooth since autopilot signals for corrective action are directly proportional to the amount of displacement. Coordinated turns are made in all modes of operation.

Any desired pressure altitude or Mach can be maintained. Any desired navigation course can also be maintained using VOR, ILS, TACAN, or INS signals.

Power Requirements

The autopilot uses 115-volt, 400-hertz, single phase AC power from AC Nav Bus No. 1, and 28-volt DC power from the Main DC Avionics Bus No. 1.

The autopilot warning circuits are connected to the Isolated DC Bus.

Autopilot Controls and Indicators

The Automatic Flight Control System (AFCS) panel is located on the pilots' center console. With this panel, the pilot can control the desired mode engagement. In addition, he can change altitude or make coordinated turns without disengaging the autopilot.

All of the switches on the AFCS control panel with the exception of the MACH INC-MACH DEC are held to their engaged position by a holding solenoid.

An interlock system prevents engagement or releases the switch if an improper engagement setup is selected by the pilot.

An AFCS trim indicator panel is located on the pilots' center instrument panel. This panel has four indicators and four indicator lights.

AFCS Control Panel Procedures

The AUTOPILOT switch on this panel is used to engage the autopilot. It can also be used to disengage the autopilot. If the autopilot disconnect switch on either control wheel is depressed, the autopilot will disengage and the AUTOPILOT switch will return to the OFF position. The yaw damper system does not disengage when the autopilot is disengaged.

The NAV SEL/LAT OFF switch allows the navigation aid selected on the copilot's Navigation Selector Panel (NSP) to furnish signals to the autopilot. Moving the switch to NAV SEL engages the navigation aid. Move the switch to neutral if the

navigation aid is to be disengaged. The switch will be returned to neutral automatically if the TURN controller knob is moved out of detent or the autopilot is disengaged.

Aileron control only is disengaged by moving the NAV SEL/LAT OFF switch to LAT OFF. Aileron control by the autopilot is restored when the switch is returned to neutral.

The ALT HLD/PITCH OFF switch allows the pilot to disengage pitch control only by placing it to PITCH OFF. The ALT HLD position allows the autopilot to keep the aircraft at the pressure altitude existing at the time the switch is engaged to this position. Altitude hold can be disengaged by placing this switch to neutral.

Next to the ALT HLD/PITCH OFF switch is the PITCH controller. The PITCH controller can be rotated toward UP or DOWN to produce a pitch change. Maximum pitch angle is 30 degrees. The PITCH controller is inoperative under the following conditions: ALT HOLD engaged, PITCH OFF engaged, G/S (glideslope) engaged, or MACH HLD EL (Mach hold-elevator) engaged.

The TURN controller, located to the right of the PITCH controller, is used to make coordinated turns with the autopilot. Turn it "L" or "R" as desired. Maximum bank angle is 38 degrees. Whenever it is used, the compass heading or navigation aid being used is automatically disengaged. When the TURN controller is returned to neutral (detent) position, the compass is automatically reengaged as the aircraft rolls to a wings-level attitude. However, the navigation aid will be reengaged only if the NAV SEL/LAT OFF switch is placed to NAV SEL.

The G/S (glideslope) switch is used with the navigation aid function of the autopilot in the ILS mode. An ILS frequency must be selected on VHF/NAV No. 2, and VOR/ILS must be selected on the copilot's NSP before the G/S switch will engage. The G/S arm light illuminates when the G/S switch is set to ON. The glideslope function engages automatically as the aircraft intercepts the glideslope Altitude hold, if ON; then it disengages, the G/S ARM light goes OUT, and the aircraft tracks the G/S signal.

The MACH HLD EL switch engages the Mach hold-elevator system. Under this condition, the Mach existing at time of engagement is held by the autopilot. The Mach can be changed up to 0.05 Mach by moving the MACH INC-MACH DEC switch as desired. The switch is spring loaded to neutral. MACH HLD EL is disengaged when control wheel steering (CWS), altitude hold, or glideslope is used.

AFSC Trim Indicator Panel Procedures

The four trim indicators, two for the rudder and one each for the aileron and elevator, allow visual monitoring of the AFCS. Anytime a correction is applied to an autopilot control axis, the indicator bar deflects from the index mark.

The A/P OFF light comes ON to indicate that the autopilot has been disengaged by one of the system safety interlocks. The light may be turned OUT by depressing either of the control wheel A/P disconnect switches.

Control Wheel Steering

Control wheel steering (CWS) is incorporated into the pilot's control wheel only. It allows aircraft attitude control without disengaging the autopilot.

Control Wheel Steering Mode is selected by placing the CWS selector switch, on the AFCS control panel, forward to the CWS position.

A wheel pressure of more than 2.5 pounds will activate the system. The bank or pitch angle will change up to the limits of the engaged operating mode.

If CWS force is released, and bank angle is greater than three degrees, the aircraft will stay at the existing bank angle.

If CWS force is released, but bank angle is less than three degrees, the aircraft will roll level and hold the existing heading.

In pitch, if the CWS force is released, the aircraft will remain at the pitch angle existing at the time of release; however, a CWS force must be sustained to hold a deviation from the normal glideslope path during coupled ILS approaches.

CWS action is present if: AUTO-PILOT switch is ON, TURN controller is in detent, and CWS switch is forward.

Roll CWS is inactivated when the NAV SEL/LAT OFF switch is in LAT OFF. NAV SEL has priority over roll CWS except when flying a coupled ILS approach. Pitch CWS is inactivated when ALT HLD or PITCH OFF is selected. Altitude hold has priority over pitch CWS. Pitch CWS has priority over MACH hold.

Autopilot Mode Selection

The various autopilot modes have definite priorities and compatibilities. The term compatibility is used to indicate that two different modes can be selected at the same time. For example, altitude hold and roll CWS can be selected at the same time.

Some modes have priority over other modes. If a higher priority mode is selected, the lower priority mode will drop out of the control circuit. The interlock system prevents the pilot from selecting a low priority mode when a higher priority mode has already been selected.

AUTOPILOT OPERATIONAL MODES

Introduction

The autopilot modes are selected by switches on the AFCS control panel. Selection of navigation aids used with the autopilot are made on the copilot's navigation selector panel.

Heading Hold Mode

This is a primary mode. In this mode, the autopilot uses the existing aircraft heading at time of switch engagement as the heading reference. This mode is selected when the AUTOPILOT switch (AFCS panel) is turned ON. It is not in operation when CWS or the TURN controller is being used.

Altitude Hold Mode

This mode holds the aircraft at the reference altitude existing at time of engagement. Setting the ALT HLD/PITCH OFF switch to ALT HLD engages this mode. The heading hold mode is retained. Altitude hold mode drops out if MACH HLD EL is selected, or if G/S ARM is selected and the aircraft intercepts the ILS glideslope. No pitch CWS is available when this mode is used.

Mach Hold Mode

This mode maintains the aircraft at the Mach existing at the time of engagement. The Heading Hold Mode is retained. Other heading modes may be selected. Use MACH HLD EL switch (AFCS panel). The Mach reference can be increased/decreased up to .05 Mach by use of MACH INC/MACH DEC switch (AFCS panel). This mode drops out if ALT HLD switch is used or if G/S ARM is selected and the aircraft intercepts the glideslope. CWS pitch control has priority over this mode.

Pitch Off Mode

Selecting PITCH OFF with the ALT HOLD/PITCH OFF switch turns off pitch control only. The rest of the autopilot is still engaged. The pilot has to control the pitch axis manually in this condition.

Lateral Off Mode

Selecting LAT OFF with the NAV SEL/LAT OFF switch turns off lateral steering only. The rest of the autopilot is still engaged. The pilot manually controls lateral steering in this mode.

Navigation Select Operation

Basic autopilot functions may be supplemented by signals from the navigation systems installed on the C-141. Selection of the desired aid is made on the copilot's navigation selector panel.

Heading Select Mode

In this mode, the autopilot maintains the aircraft on the heading set with the heading marker on the copilot's HSI. Set the HDG SEL/NAV button on the copilot's navigation selector panel to HDG, and the NAV SEL/LAT OFF switch (AFCS panel) to NAV SEL.

VOR/ILS Mode

This mode is placed in service by depressing the VOR/ILS button on the copilot's navigation selector panel, and placing the HDG SEL/NAV button to NAV. After these two have been set, set the NAV SEL/LAT OFF switch (AFCS panel) to NAV SEL. When intercept heading is established, the autopilot will remain responsive to the heading marker until the VOR course deviation is one dot deflection; then the navigation aid takes over control.

To use ILS, tune a localizer frequency on the VHF NAV No. 2 and proceed as above. The autopilot will begin to track the localizer when course deviation is slightly greater than two dots. After localizer intercept, position the G/S switch to G/S ARM. The autopilot will maintain level flight until intercepting the G/S; then it will begin to track the G/S signal.

TACAN Mode

For this mode, use the TACAN button on the copilot's navigation selector panel. Next, set the HDG SEL/NAV button to NAV. On the AFCS panel, the NAV SEL/LAT OFF switch is set to NAV SEL.

Turn the aircraft with the copilot's HSI heading marker to intercept the desired TACAN radial. The autopilot will receive TACAN course signals when the TACAN beam coupler is energized at one dot course deviation.

INS Select Mode

To use INS, select INS 1 or INS 2 on the copilot's navigation selector panel. On the AFCS panel, place the NAV SEL/LAT OFF switch to NAV SEL. The autopilot will then intercept and track the active INS course if the copilot's HDG SEL/NAV button is in NAV.

Chapter 8

YAW DAMPER SYSTEM

Introduction

The Automatic Flight Control System (AFCS) includes a yaw damper system. This yaw damper system operates independently of the autopilot portion of the AFCS and is electrically isolated from the autopilot.

This yaw damper system controls the rudder in all modes of operation.

Theory of Operation

Yaw damper engagement means that the rudder control surface is being positioned by the rudder servos of the AFCS. This engagement is accomplished by placing the yaw damper switch on the yaw damper panel to ON. The rudder servos have automatically assumed the position of the aircraft prior to this section, resulting in a smooth takeover by the yaw damper.

If the autopilot is not operating, yaw damper rate gyros No. 1, No. 2, and No. 3 sense any deviation of the aircraft in the yaw axis. Immediately, a signal is generated proportional to the yaw, sent to the yaw damper computer, amplified, and then sent to the servos to dampen out the deviation.

If the autopilot is operating, a dynamic vertical sensor (pendulum) sends signals into this rudder channel that are used for turn coordination. That is, if the turn is not coordinated, this device senses this fact and generates a signal. The magnitude of the signal is proportional to the amount of slipping or skidding. The vertical sensor's signal is then summed in with the yaw rate gyro signals to obtain the proper rudder position for a coordinated turn.

Operation

The yaw damper sy tem uses 115-volt, 400-hertz, single phase AC power from the Emergency AC Bus through three yaw damper circuit breakers on the emergency circuit breaker panel. In addition, the yaw damper uses 28-volt DC power from the Emergency DC Bus. There are two DC yaw damper circuit breakers on the emergency power circuit breaker panel.

The yaw damper control panel is located on the pilot's center console. To turn on the yaw damper, place the OFF-ON switch to ON.

Warning System

If one of the yaw rate gyros or servos malfunctions, the monitor system will turn on the YAW DAMPER FAULT light located on the pilot's annunciator panel.

If more than one yaw rate gyro or servo malfunction is detected by the monitor circuit, it turns on the YAW DAMPER INOPERATIVE lights located on the pilot's and copilot's instrument panels.

Testing

The yaw damper test circuit is wired through the touchdown relays, so that it is rendered inoperative whenever the aircraft is in flight.

Testing is accomplished from the yaw damper control panel located on the pilot's center console. Procedures for testing are in TO 1C-141A-1.

Chapter 9

FLIGHT DIRECTOR SYSTEM

The C-141 aircraft is equipped with dual flight director systems (FDS). They are designated the pilot's and copilot's, and are completely independent. Each has its own compass and navigational aids inputs. The pilot's FDS receives its signals from the No. 1 navigational aids. The copilot's FDS receives its signals from the No. 2 navigational aids.

Attitude is by a vertical gyro signal from INS or AHRS (INS No. 1 or AHRS for the pilot's, and INS No. 2 or AHRS for the copilot's). Attitude information for both Flight Director Computers is supplied by the Test Programmer and Logic Computer. This signal is the median signal of the three attitude sources in the C-141.

Each FDS consists of six major components: Attitude Director Indicator (ADI), Horizontal Situation Indicator (HSI), Flight Director Computer, Roll and Pitch (Attitude) from INS or AHRS, Rate Transmitter, and the Navigation Selector Panel.

In addition to the above, there is the RATE OFF warning flag, Switching Rate Gyro, AWLS/Flight Director Test Panel, AWLS Fault Identification Panel, and AWLS Progress Display Panel. The Flight Director Computers, INS and AHRS Gyros, and the Rate Transmitter are located in the underdeck equipment racks.

The FDS is simply a combining of indicators, i.e., a bringing together or integration of many indicators into two. These two instruments are used to portray the aircraft's horizontal and vertical attitudes. The navigation selector panel is used to select different navigational systems for presentation on the flight director instruments.

ADI

Basically, the Attitude Director Indicator is a roll and pitch indicator. It employs a conventional artificial horizon to indicate the aircraft's attitude, relative to the earth. The INS or AHRS gyros and attitude sphere are used to provide this information.

The attitude warning flag comes into view when power is lost to either an attitude gyro or ADI.

A pitch trim knob is on the lower right-hand corner of the ADI to adjust the position of the attitude sphere in the pitch axis.

Turn and Bank Indicator

At the bottom of the ADI is a turn and slip indicator and a 4 minute rate-of-turn needle. These indicators provide regular needle and ball operation.

On the left side of the ADI is the vertical deviation indicator. The aircraft's position is represented by the center line, which is an extension of the miniature airplane. Vertical deviation is presented as a variable marker. The VDI has a warning flag which will appear if the glideslope signal is lost or unreliable. However, until the VDI is used, both the VDI and warning flag will be biased out of view.

An altitude indicator (rising runway) moves up into view at 180 feet Radar altitude during approaches. At touchdown the altitude indicator should be touching the wheels of the miniature aircraft.

The ADI has two other items of importance: the bank and pitch steering bars. These are used to reflect computed bank and pitch steering commands and will be discussed in a later paragraph. Therefore, the ADI is primarily an artificial horizon with a turn and slip indicator and the GSI.

HSI

The Horizontal Situation Indicator is primarily a master repeater for the compass system. Also incorporated into the HSI is a range (DME) indicator and radio magnetic bearing pointer (RMI needle).

Aircraft heading (magnetic, true or directional gyro) is read under the upper lubber line. The aircraft symbol is affixed to the face of the indicator, with the upper and lower lubber lines representing an extension of the aircraft's nose and tail. The compass card rotates around the aircraft symbol and lubber lines as aircraft heading changes.

The heading set knob is used to manually select different heading references as indicated by the position of the heading marker, relative to the compass card. Once set, the heading marker will rotate with the compass card as aircraft heading changes.

The bearing pointer is basically an RMI (Radio Magnetic Indicator) needle. However, in two cases it does not indicate the magnetic bearing to the station. This will be covered with the different modes of operation.

The center portion of the HSI (except for the aircraft symbol) is the course deviation section.

The course deviation indicator (CDI) reflects the actual deviation from the desired course (track or radial), as selected in the course window and indicated by the head of the course arrow. The TO-FROM indicator solves ambiguity, i.e., if the course selected is toward or away from the station. When the diamond points toward the course arrow head, the course is TO; when it points toward the course arrow tail, it is FROM the station. The desired course is selected by rotating the course set knob. Any one of 360 different courses can be selected. The complete CDI section will rotate when selecting a new course or changing the aircraft heading. The course warning flag will be out of view when signals are reliable.

The range indicator (DME) provides a miniaturized, digital readout of the distance to the selected station, if the mode selected affords the capability. The range indicator's maximum reading is 999 nautical miles.

Navigation Selector Panels

Two NAVIGATION SELECTOR panels (NSP), located on the pilot's and copilot's glare shields, contain controls for selecting the navigation modes for the flight director systems. The pushbuttons on the pilot's NAVIGATION SELECTOR panel control inputs to No. 1 flight director system, and the pushbutton on the copilot's NAVIGATION SELECTOR panel control inputs to No. 2 flight director system and autopilot. Mechanical interlocks are incorporated in the top row of pushbuttons to prevent depressing any two pushbuttons together. The four pushbuttons on the bottom row of each unit (GRID HDG is light only) may be selected independent of the top row selection.

INS-1 and INS-2 pushbutton - applies INS navigation information and true heading from the selected INS to the associated HSI.

INS-1 and INS-2 ALERT (bottom half of INS No. 1 and INS No. 2 pushbuttons) illuminate when the ALERT light on the CDU of the associated INS illuminates.

TACAN pushbutton - applies TACAN signals to the associated HSI.

VOR/ILS pushbutton - applies VOR/ILS signals to the associated HSI.

NAV OFF pushbutton - removes all nav receiver and computer inputs to FDS and HSI.

GRID HEADING - consists of two independent lights, HSI and BDHI. They illuminate when GRID heading from INS is displayed on the associated HSI or BDHI as follows:

Pilot's NSP - GRID HD (HSI light) will illuminate when INS-1 is in Grid and pilot has selected MAG HDG (INS) and NSP is not in INS-1 or INS-2.

Copilot's NSP - GRID HDG (HSI light) will illuminate when INS-2 is in Grid and copilot has selected MAG HDG (INS) and NSP is not in INS-1 or INS-2.

Copilot's NSP GRID HDG (BDHI light) will illuminate when INS-1 is in Grid and pilot has selected MAG HDG (INS).

NOTE - These lights are not affected by AHRS. ATT SEL pushbutton - allows selection of INS or AHRS as the source of attitude signals for the associated ADI. When INS is selected, the pilot's source is INS No. 1 and the copilot's source is INS No. 2. The pilot's ATT SEL switch receives power from the engineering DC bus.

MAG HDG pushbutton - If TACAN, VOR/ILS, or NAV/OFF is selected, MAG HDG pushbutton allows selection of either the INS or AHRS as the source of magnetic heading for the associated HSI.

ADI REP pushbutton - if selected on the pilot's NAVIGATION SELECTOR panel, pilot's ADI repeats indication on copilot's ADI; if selected on copilot's NAVIGATION SELECTOR panel, copilot's ADI repeats indication on pilot's ADI.

NAV HDG pushbutton - allows selection of heading mode or navigation mode.

The ADI REP Function

The ADI REP function is a feature whereby one pilot can display the same steering and glideslope information on his ADI that is displayed on the other pilot's ADI. Whenever the ADI REP button is depressed, the associated ADI will repeat the same bank and pitch steering commands, flags, and guideslope deviation information that are being presented on the other FDS ADI.

It must be emphasized that attitude, attitude warning, and turn and bank information will not be repeated. The ADI REP function can be used when a glideslope receiver or flight director computer fails.

HDG SEL/NAV Button

Anytime the HDG SEL/NAV button is positioned to HDG SEL, the FDS will disregard the NAV signals and use the heading marker's setting to compute the bank angle necessary for the new heading. That is, in the HDG SEL mode of operation, the bank steering bar will present steering commands to turn to whatever heading is selected under the heading marker.

A practical use of this feature can be seen during a missed approach situation. With the FDS in the ILS APPROACH mode, the missed approach heading could be set under the heading marker. In the event of a go-around, moving the HDG SEL/NAV button to HDG SEL would provide bank steering information to the missed approach heading.

The HDG SEL position will have no effect on the presentation of the HSI. It merely changes the reference used by the FDS Computer to compute bank steering signals from the desired course to a desired heading. Maximum bank, as commanded by the FDS in HDG SELECT, is 30°.

When the HDG SEL/NAV button is in NAV, the FDS is now armed for capture of the selected NAV/AID. When the aircraft is within the necessary capture zone, the FDS will command intercept and tracking of the desired course or track.

Maximum bank, as commanded the FDS in NAV, is 30° in all modes except ILS and INS. At glideslope capture, the bank command is further reduced to 7.5°. For INS, the bank angles below 10,000 feet - 23° MAX; 10,000 feet to FL 250 - 15-20°; above FL 250 - 15° MAX.

NAV-OFF/NAV Mode

HSI

The only usable information displayed on the HSI while operating in this mode will be aircraft heading. Aircraft heading will be displayed under the upper lubber line and also as a digital "readout" in the course window. (This is the result of the course arrow head being slaved to the upper lubber line.) The bearing pointer will be slaved to the lower lubber line, the CDI will be centered and the warning flag in view, the distance indicator will be masked, and the heading marker will remain at whatever position it was set, i.e., it will rotate with the compass card until it is manually changed.

ADI

The ADI will be in the basic navigation mode and afford only basic flight indications. The attitude sphere (artificial horizon) and turn and slip (needle and ball) are the only active indications. The VDI, GSI warning flag, bank and pitch steering bars, and course warning flag will all be biased out of view.

Inasmuch as the VDI and bank steering bar are inactive and pulled out of view in this mode, their associated warning flags are also pulled out of view.

VOR-NAV Mode

HSI

With the VOR/ILS-1 button depressed and a VOR station tuned on the VHF-NAV receiver, VOR signals will be available for use by the HSI. By selecting the desired course (either inbound or outbound) in the course window, conventional ID-249 information will be available to the pilot. Aircraft heading will be presented under the upper lubber line.* Course deviation (left or right) will be reflected by the CDI. In this mode, each dot of deviation represents 5° off course. TO-FROM information will be determined and presented by the position of the TO-FROM indicator. Signal reliability is ascertained from the course deviation and warning flag. Magnetic bearing to the station is read directly from the compass card, under the bearing pointer's head. The reciprocal is read at the bearing pointer's tail. The range indicator is inactive and it will be masked.

ADI

In addition to basic flight indications, computed bank information to the selected course (radial) will be reflected on the bank steering bar. The bank steering bar is directional (fly-to-indication) during normal intercepts and will be centered if one of two conditions exists: the aircraft is on course, or the aircraft has been banked sufficiently for a proper intercept angle to the desired course. Bank angle signals, along with course error and course deviation signals, are sent to the FDS, where the necessary bank angle is resolved and the necessary amount of bank angle is deflected on the bank steering bar. The maximum bank, as commanded from the computer for all NAV modes, will be 30°.

Bank steering bar reliability can be ascertained by the course warning flag. When the flag is in view, it indicates either lost or unreliable course or steering information. Failure of the FDS Computer will affect only the bank steering bar, as it does not have inputs to the HSI. In the above condition, the bank steering bar will also be retracted from view as an added precaution.

ILS-NAV Mode

HSI

When a localizer frequency is selected on the VHF-NAV control, the VOR/ILS-1 button depressed, and sufficient localizer signals received, the system is in the ILS-NAV mode. The FDS will present information similar to that of the ID-249. Select the localizer course in the course window. The CDI will display the relative position of the center line. Each dot of deviation in the ILS mode represents a deviation off the center line. The TO-FROM indicator will be out of view, since solving for ambiguity is not a function of the localizer system. The bearing pointer will freeze at its last position. The range indicator will be masked.

As long as the front course approach heading is selected in the course window, the CDI will ALWAYS be directional.

ADI

All of the features discussed with VOR-NAV operations will be active on the ADI (attitude sphere, turn and bank, and bank steering bar). The bank steering bar will command intercept and tracking of the localizer when the aircraft is within slightly less than 2 dots of CDI. As the aircraft intercepts the glideslope, the VDI will appear from the top of the scale and move downward as the aircraft approaches the center of the glideslope. Each dot of deviation represents 1/4 degree. Whenever the aircraft is within 1/4 of a dot from the glideslope centerline, the pitch steering bar will be deflected into view close to the center of the ADI. The FDS Computer is now in the ILS-APPROACH mode, and closer lateral guidance is offered. In this mode, the maximum bank angle that the bank steering bar will command is 15°. As long as the aircraft stays within two dots of deviation, either CDI or GSI, the FDS will remain in the ILS-APPROACH mode.

Desensitization of both LOC and G/S is initiated at G/S capture. The roll channel contains two desensitizers: one (No. 1) for flight director No. 1, and the other (No. 2) for the active and model channels and flight director No. 2. Switching is determined by the test programmer and logic computer (TPLC) which programs the desensitizer at glideslope engage as a function of either radar altitude or time. The LOC (Bank Channel) is desensitized to 45%, and the G/S (Pitch Channel) is desensitized to approximately 18%.

NOTE: Steering information cannot be used for flying inbound on the back course or outbound on the front course of a localizer.

TAC-NAV Mode

Tacan

With TACAN pushbutton depressed and the TACAN receiver tuned, the HSI will display bearing, course deviation, distance, and to-from information relative to the TACAN station. Each dot displacement on CDI is 5°. The course capture zone is a function of distance. The intercept threshold decreases with distance from the ground station. The intercept starts at approximately 2 dots at 50 miles and 2/3 dot at 150 miles.

INS-NAV Mode

HSI

Selection of INS or INS-2 will display somewhat different indications than VOR or TACAN on the HSI. The CDI will reflect miles off desired track instead of degrees. Each dot of deviation is 1.5 NM. The desired course will be automatically displayed. The bearing pointer will indicate true track.

The range indicator will be active, and the maximum segment distance-to-go is 999 NM. But, when operating in the INS mode, the actual readout on the distance indicator will be the DME for TACAN No. 1 on the pilot's HSI and the DME for TACAN No. 2 on the copilot's HSI.

ADI

The FDS will command a maximum intercept angle of 45°, regardless of cross-tract distance. The ADI indications will remain the same as VOR-NAV, with the understanding that bank steering information will be computed to the desired INS course, as displayed in the course window. The VDI, glideslope warning flag, and pitch steering bar will all be biased out of view.

FDS Malfunctions

Malfunctions affecting the valid operation of the pilot's and copilot's attitude source, the ADI attitude spheres, and the command steering bars are indicated by the illumination of caution lights on the progress display panels and by one or more lights on the fault identification panel.

Attitude Gyro Malfunction

As previously mentioned, furnishes pitch and roll displacement signals directly to the ADIs.

These displacement signals are also furnished to the TPLC, where these signals are compared. The median sign is then selected and sent to both FDS computers and the AFCS.

The TPLC also monitors the ADI sphere relationship to the signal.

NOTE: For this discussion, the pilot's system will be used. Refer to Fault and Caution panels for indications.

1. Problem

Pilot's gyro exceeds 5° of deviation, either pitch or roll.

Display

The AUTO CAUTION, INS/ATT, and TPLC fault lights will illuminate.

2. Problem

Pilot's ADI sphere fails to drive within 5°, pitch or roll, of the gyro displacement signals.

Display

The AUTO CAUTION and INS/ATT fault lights will illuminate.

If the above deviations were caused by a low voltage condition affecting the GYRO or ADI Amplifier, the ATTITUDE WARNING flag would also be displayed.

FDS Malfunctions

Any malfunction of the Flight Director Computer should be indicated by the illumination of the appropriate FLT DIR fault light and the MAN caution light. If the malfunction affects the bank channel, the ADI Course Warning Flag will also be in view.

FDS Self-Test

The FDSs have the capability of self-test.

The test is simple and short, taking a maximum of 6.5 seconds to complete.

Chapter 10

INTERPHONE AND PUBLIC ADDRESS SYSTEM

AN/AIC-18 Interphone System

The AN/AIC-18 Interphone System provides voice communication between the flight stations, cargo compartment, and ground crew personnel. It also provides switching and mixing facilities for transmitting and receiving over the communications systems, and receiving the navigation systems.

The DC voltage for the interphone system consists of three independently operated circuits. Operational power for each circuit is provided through 28-volt DC circuit breakers.

Interphone control and monitor panels are installed at the pilot's, copilot's, navigator's, and flight observer's crew positions. The flight engineer's position has only the C-3942 (P) control panel installed. The Center Avionic Equipment Rack contains both panels.

The control panel consists of a mike selector, 8 push-pull audio switches, a HOT MIC TALK switch, a master volume control, and a CALL button. The monitor panel provides 8 additional audio switches to increase the receiving capability of the control panel.

The mike selector has seven positions and allows the operator to transmit and receive the following facilities:

I	-	Interphone and public address transmission
U1	-	UHF Command Radio No. 1
U2	-	UHF Command Radio No. 2
H1	-	HF Liaison Radio No. 1
H2	-	HF Liaison Radio No. 2
V1	-	VHF Command Radio No. 1
V2	-	VHF Command Radio No. 2

NOTE: Only the interphone and public address positions are wired for operation at the forward crew door and the two jumpmaster/loadmaster control panels. Only the interphone position is wired for operation at the flight engineer's panel.

There is a MIC-OFF-INTERPHONE switch on the control yoke. When the switch is held in the up position (INTERPHONE), transmissions will be made only on interphone, regardless of the position of the MIC selector on the interphone control panel. In the down (MIC) position, the user is able to transmit over whatever facility he has selected on the MIC selector on the interphone control panel. In the spring-loaded middle position, the MIC is inoperative.

There is also an interphone button on the nose steering wheel that enables the pilot to transmit over interphone while steering the aircraft.

The 16 push-pull, rotary, audio switches enable the user to monitor any combination of audio facilities and individual volume control. The push-pull feature connects and disconnects the individual audio facilities, while the rotary feature affords the individual volume control.

The master volume control determines the output of an audio amplifier within the control panel, through which all signals are controlled simultaneously. This does not mean that all signals will be heard equally well, as most signals arriving at the amplifier have passed through two other volume controls. Therefore, the strength of each signal will be different. The audio amplifier will amplify each signal the same ratio, but it will not amplify a weak signal to the level of a strong signal.

The CALL feature is used to alert all crew members and to assure that they receive the information broadcast on the interphone circuit. The system is activated by depressing the CALL button on the control panel. Energizing the CALL button does not interrupt the other signals being received, but the CALL signal will be somewhat louder than the other signals.

The HOT MIC buttons on the control panel permit direct transmission to all interphone stations on the flight deck, avionics area, and forward crew door, without pressing the microphone switch at the interphone station. The push-pull buttons are labeled TALK and LISTEN and must be pulled out for hot microphone mode of operation.

An auxiliary control panel is installed in the vertical stabilizer. Operation from this position is limited to interphone.

There are external receptacles installed on the forward fuselage, left wheel well, and right wheel well, to permit interphone communications between flight and ground personnel. The receptacle on the forward fuselage is wired into the center avionics equipment track control panel. The left and right wheel well receptacles are wired into the left and right jump door interphone control panels respectively.

Public Address System AN/AIC-13

The public address system allows the crew to broadcast interphone or stations received on the ADF receivers throughout the cargo compartment. The system consists of a main control panel, three auxiliary control panels, a public address switch, three amplifiers, and six speakers.

The required 28-volt DC power for operation is provided from the DC Avionics Bus No. 2, through a circuit breaker on the avionics circuit breaker panel.

Main Control Panel

The main control panel is located at the flight engineer's station. This panel has complete operational control of the system. The panel consists of a power

ON/OFF switch, a speaker selector switch, a volume control, and five toggle switches. The power ON/OFF switch turns the system on or off. The speaker selector switch selects the desired speaker or speakers to be used. In the JUMP position, the speaker forward of each jump door is in operation; in the ALL position, all six speakers are operational; in the FWD position, only the most forward speaker (just aft of the crew entrance door) is operational; and in the AFT position, only the aft troop door speaker is operational. The master volume control controls the volume of the entire system. Only the two toggle switches marked ADF 1 and ADF 2 are wired for operation. By placing them in the UP position, ADF reception is broadcast over the PA system. ADF reception is blocked out anytime the PA position is energized at the Jumpmaster/Loadmaster panels.

LH and RH Jumpmaster/Loadmaster Panels

These panels are located at the forward crew door and left and right jump doors. In addition to providing interphone reception and transmission capability, this panel affords the user the ability to transmit over the PA system, provided it is turned on at the main control panel. It also provides remote control of the volume level through the use of INCREASE and DECREASE buttons. These pushbuttons are electrically interlocked to prevent simultaneous increase or decrease operation.

Pilot's Side Console

The public address switch is located at the pilot's side console. With the switch in the INPH & PA position, any signal broadcast over the interphone system will be amplified and transmitted over the PA system, provided the PA system is turned on. In the INPH position, interphone communications are restricted to the normal interphone circuits. In the INPH and PA position, the ADF receivers will not be heard through the PA system.

Speakers No. 1, 2, and 3 are located forward of the troop doors, speakers No. 4 and 5 are just forward of the troop doors, and speaker No. 6 is aft of the troop doors.

The three amplifiers are on the center avionics rack. The No. 1 amplifier supplies power for the No. 1 and No. 3 speakers, and the No. 2 amplifier supplies power for No.2 and No. 4 speakers. The No. 3 amplifier powers the No. 5 and No. 6 speakers.

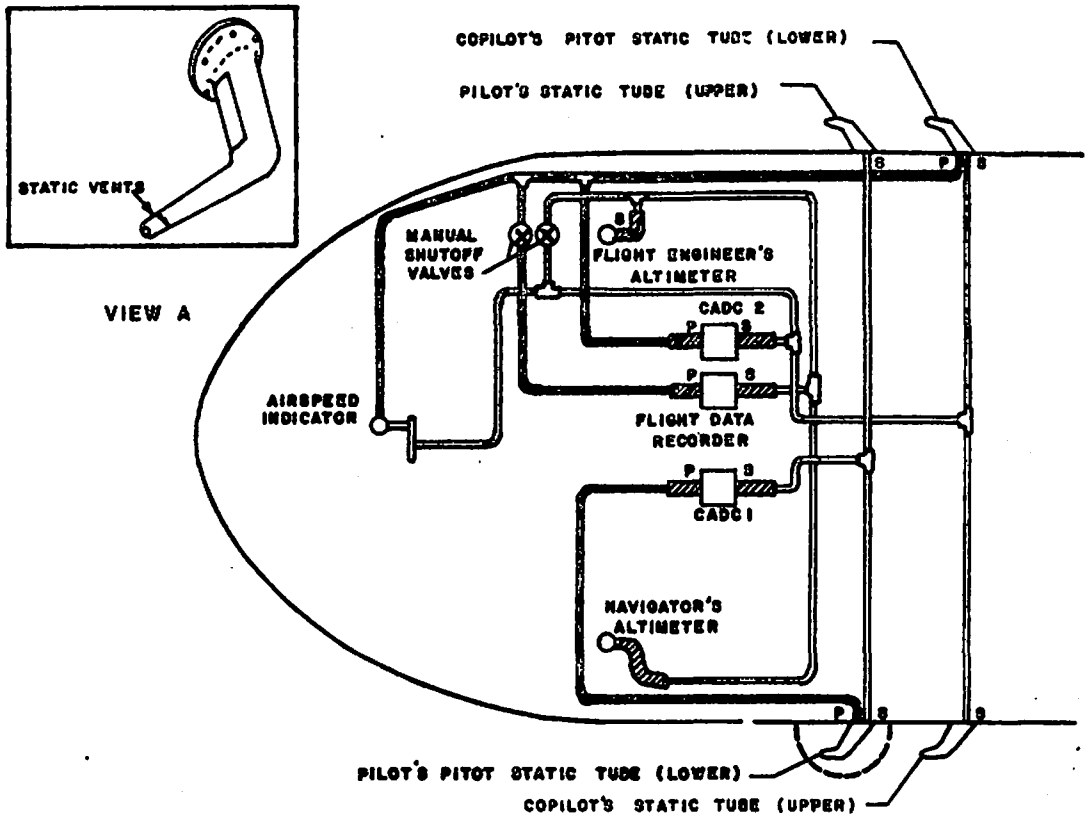

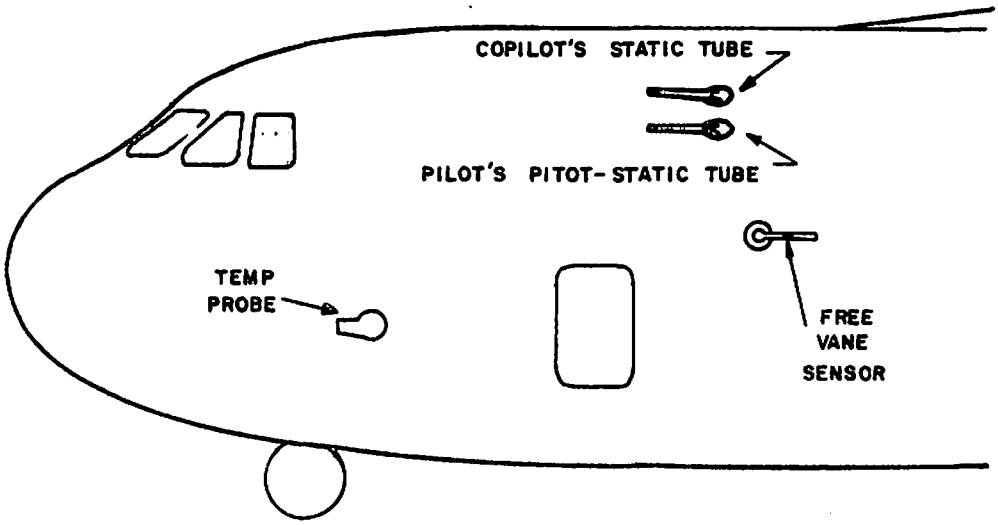

PITOT-STATIC SYSTEMS SCHEMATICS

PILOTS PITOT STATIC SYSTEM SCHEMATIC OR THE #1 PITOT STATIC SYSTEM

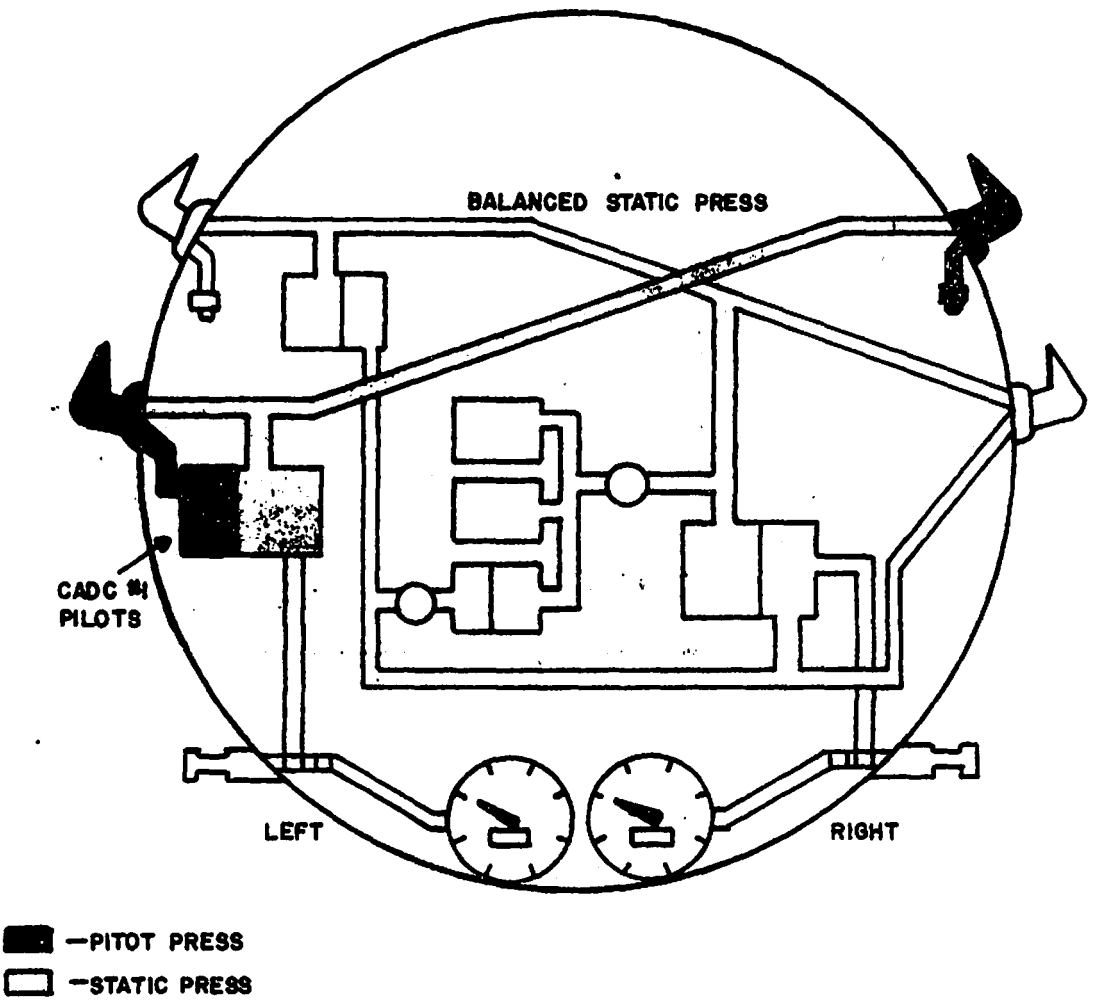

COPILOTS PITOT STATIC SYSTEM SCHEMATIC OR THE #2 PITOT STATIC SYSTEM

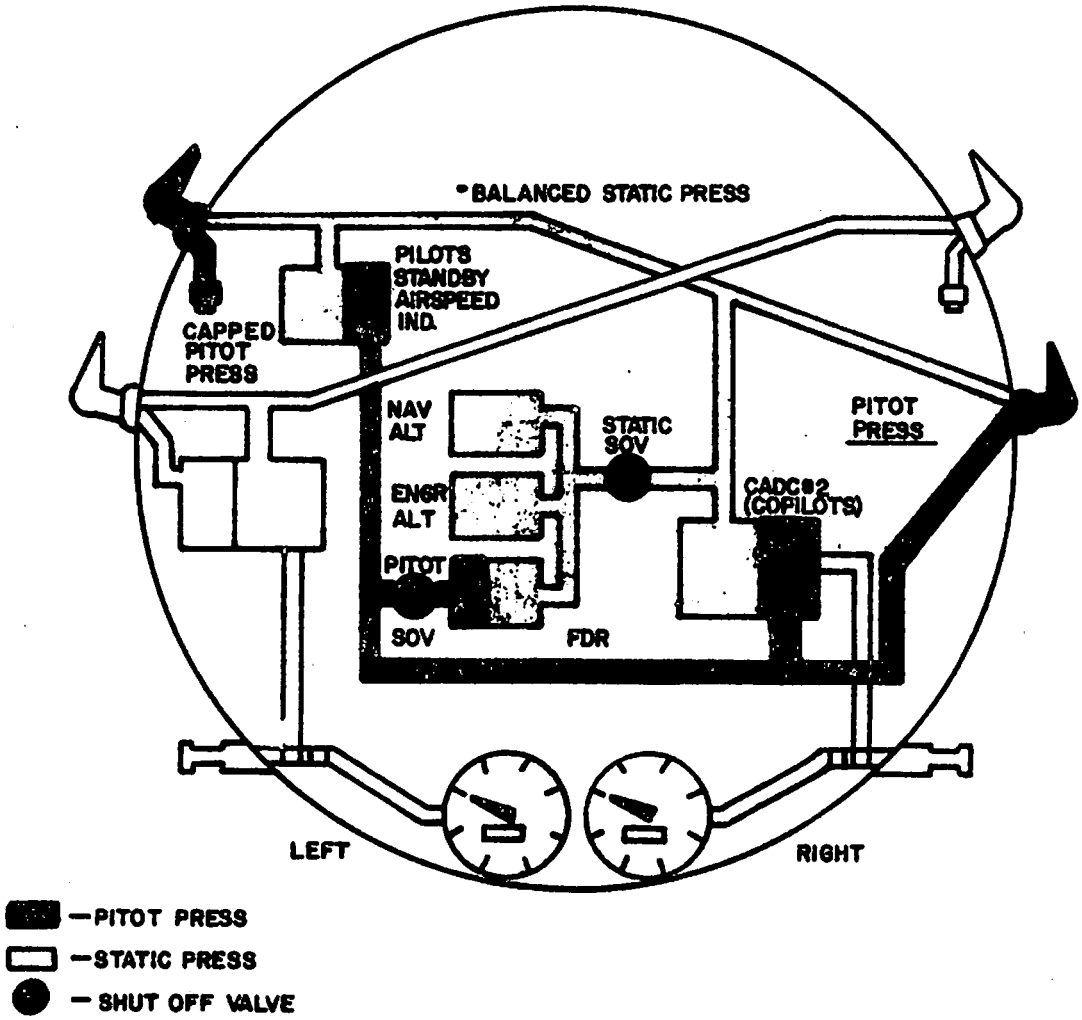

C-141 A/B TOTAL TEMPERATURE SYSTEM

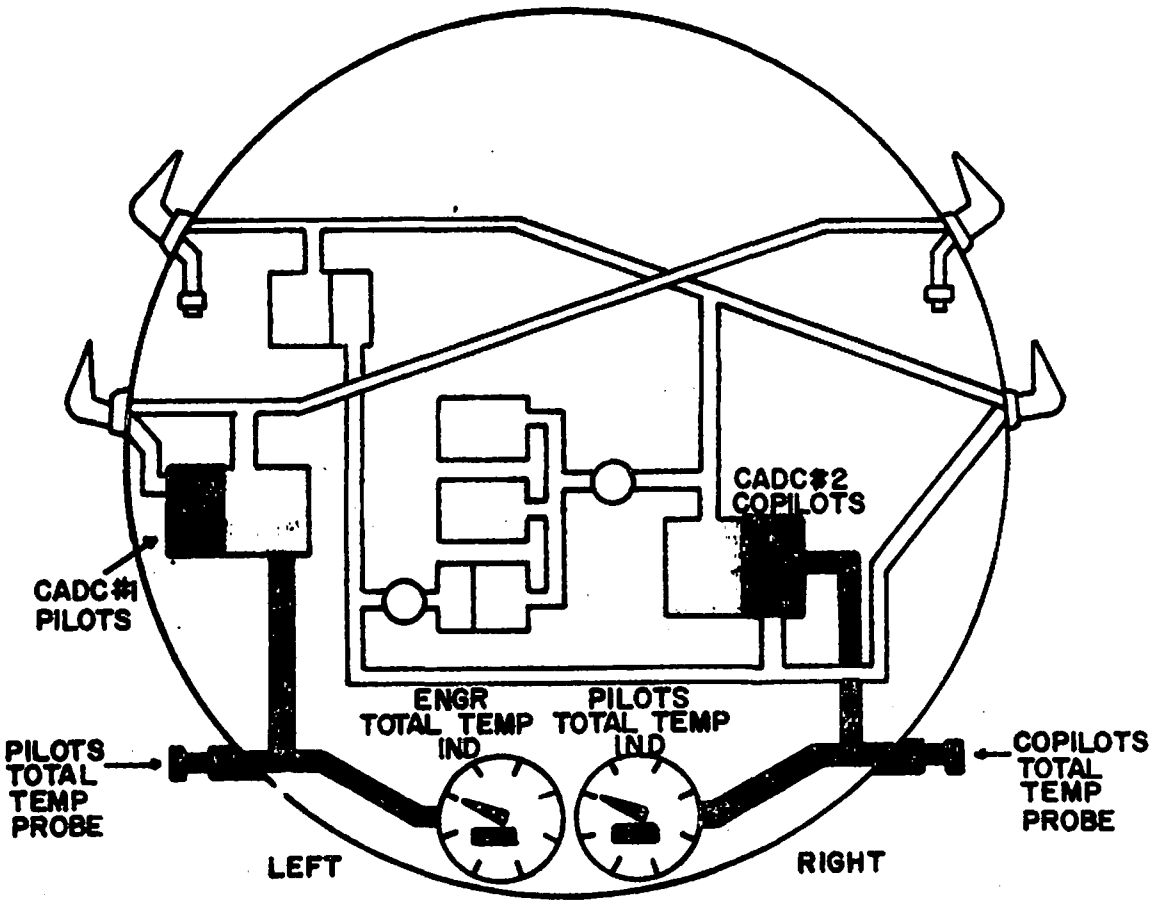

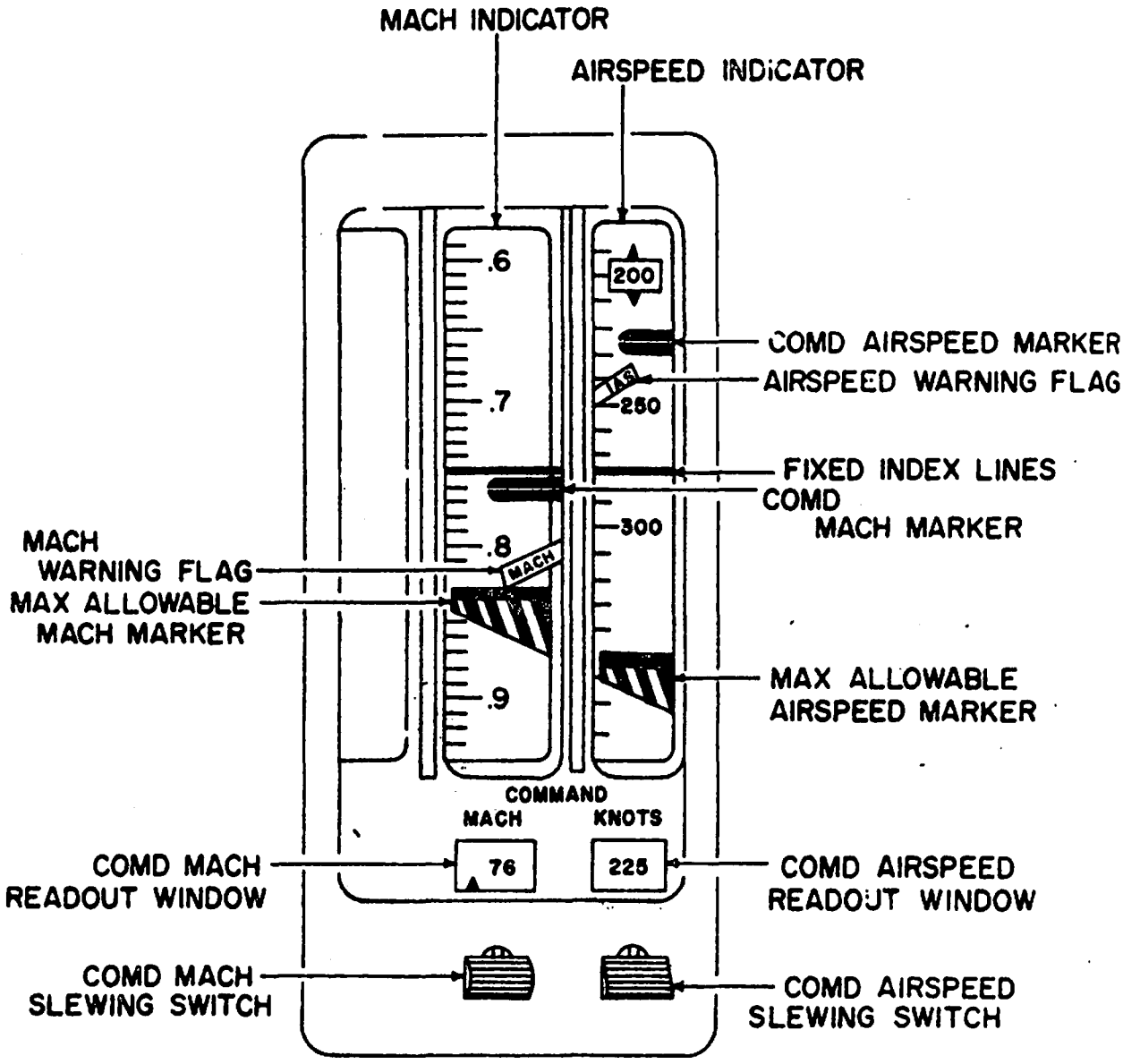

MACH-AIRSPEED, SAFE SPEED INDICATOR

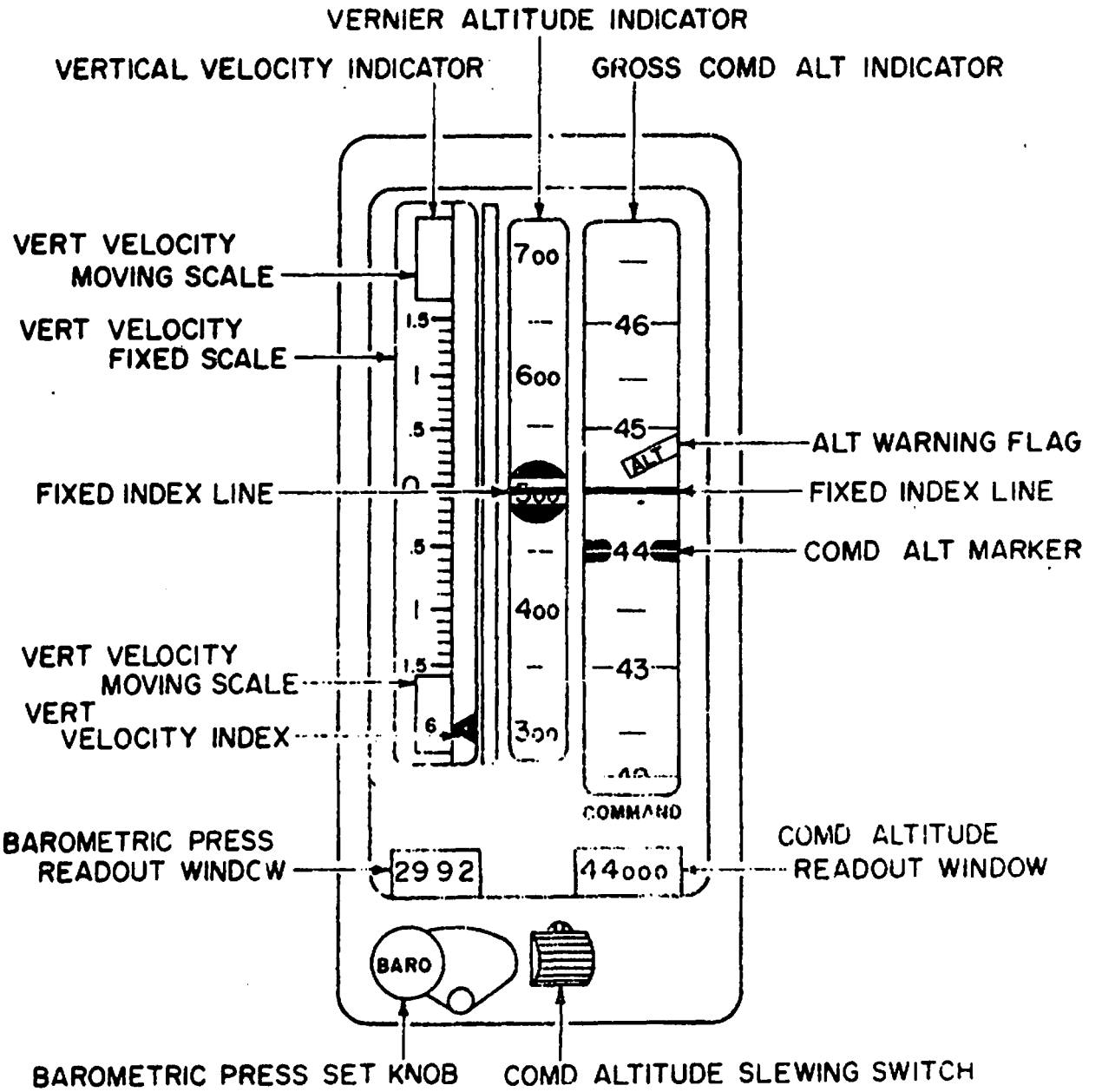

ALTITUDE-VERTICAL VELOCITY INDICATOR

C-141 A/B CADC-VSFI GROUP

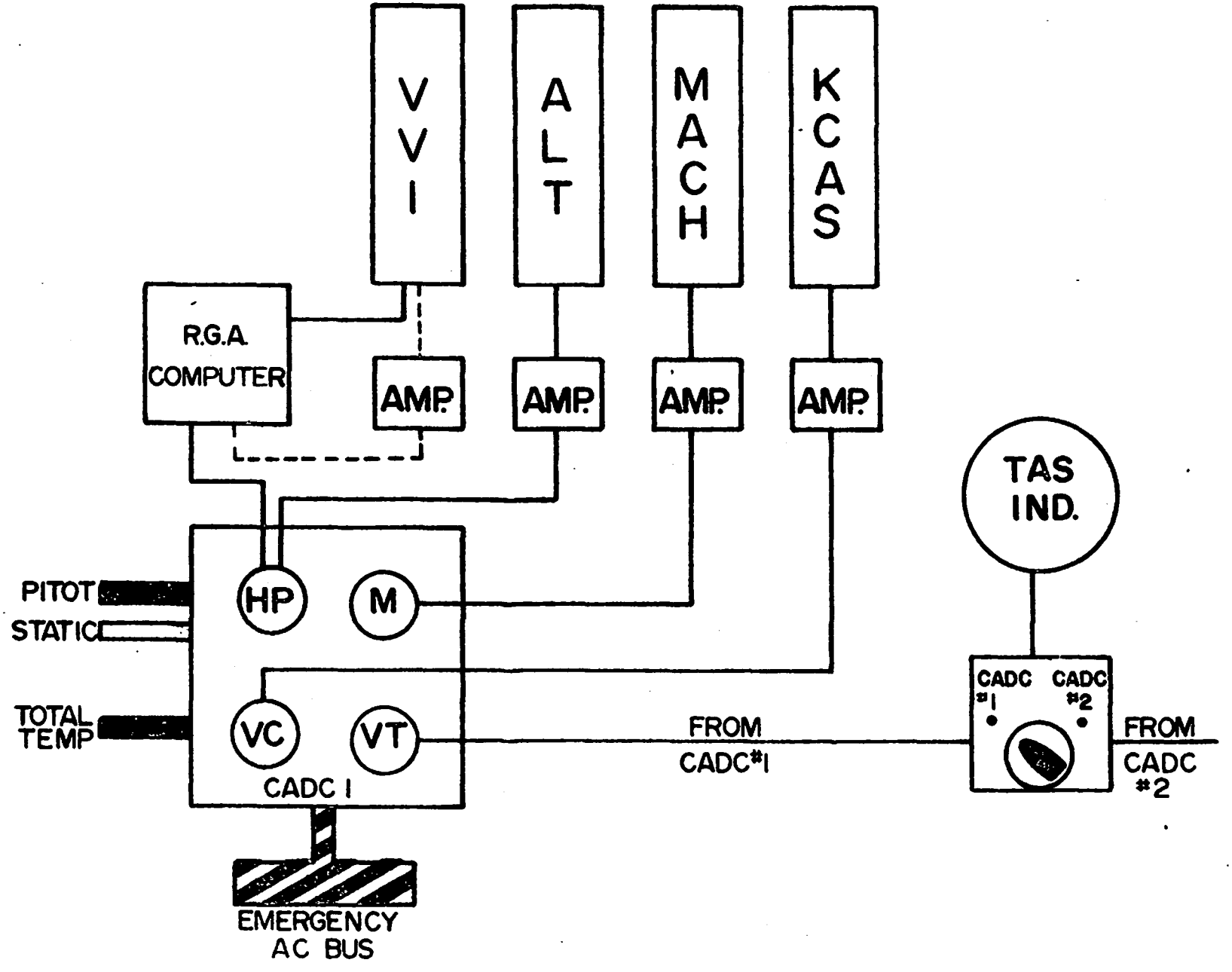

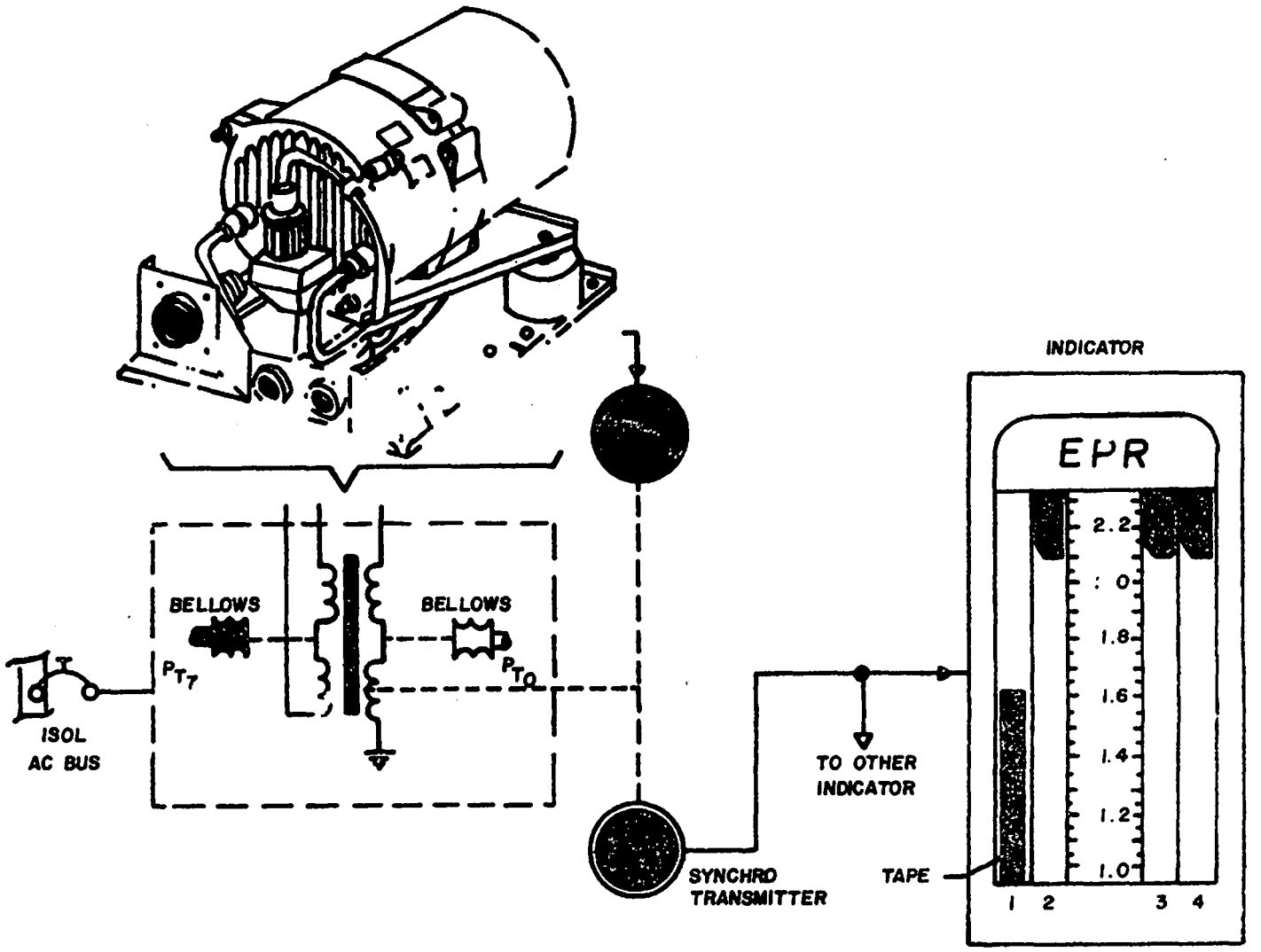
INDICATOR
EPR
2.2
2.0
1.8
1.6
1.4
1.2
1.0
1 2 3 4
BELLOWS
BELLOWS
P_{T_7}
P_{T_0}
ISOL
AC BUS
TO OTHER
INDICATOR
SYNCHRO
TRANSMITTER
TAPE

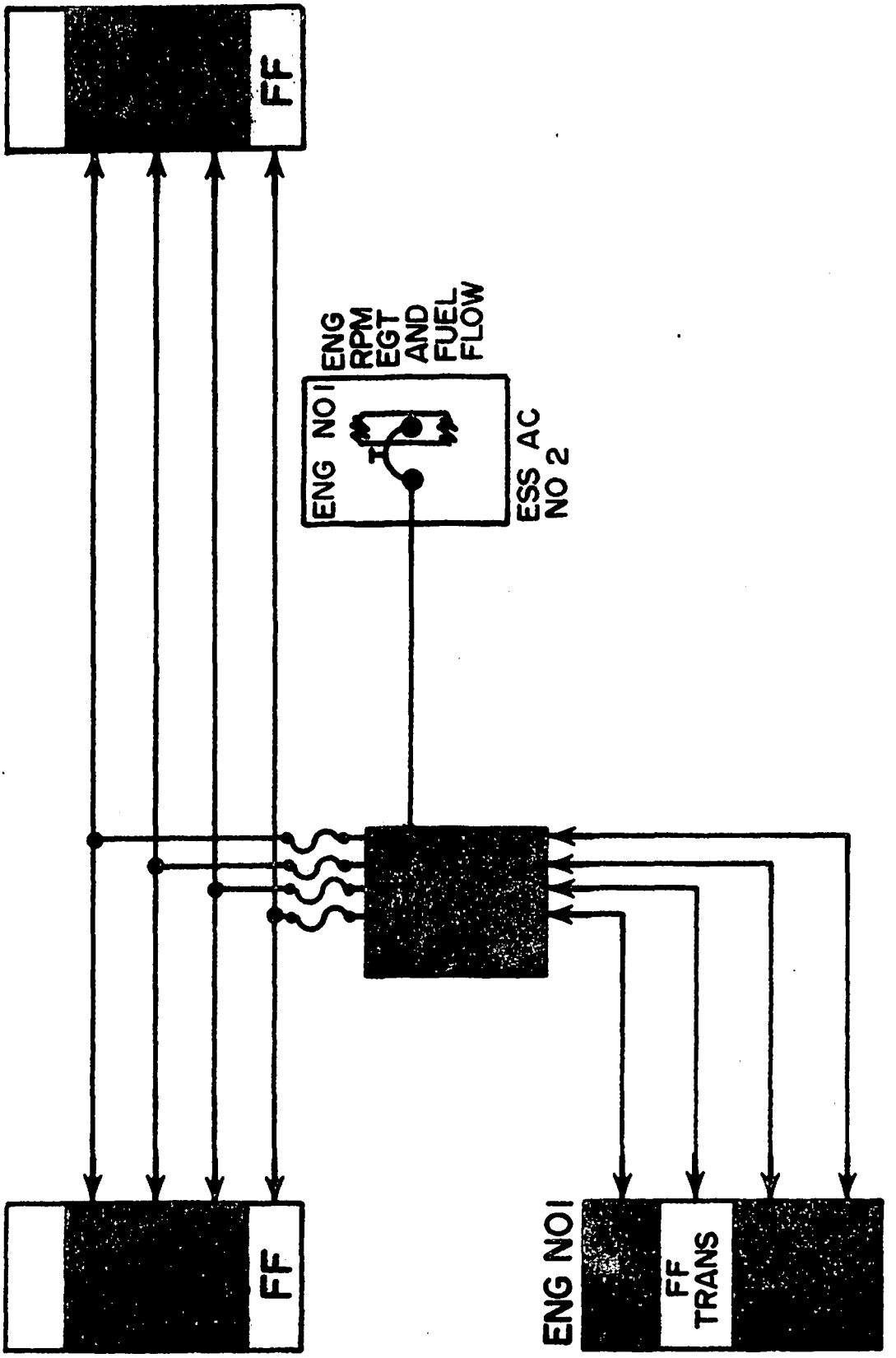
FF
ENG NO1
ENG
RPM
EGT
AND
FUEL
FLOW
ESS AC
NO 2
FF
ENG NO1
FF
TRANS

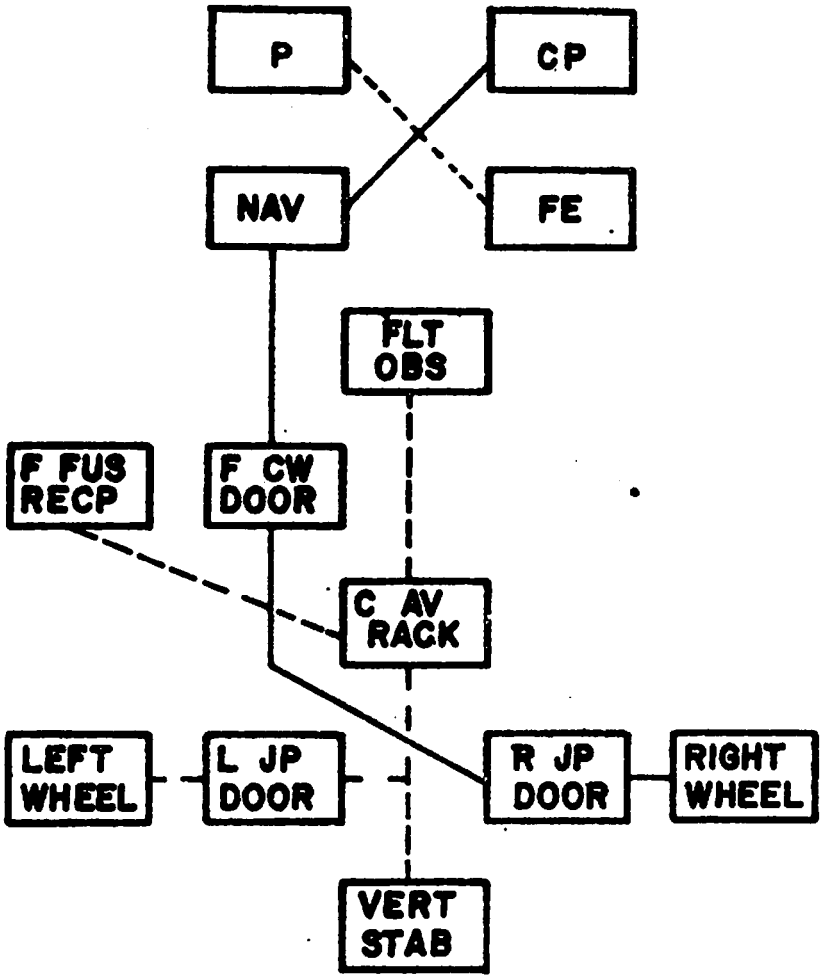

C-141 Interphone System

Pilot's - EMER DC BUS (17A)

Co-pilot's - MAIN DC 2 (19A)
AVIONICS BUS

Flt Observer's - MAIN DC 1 (20A)
AVIONICS BUS

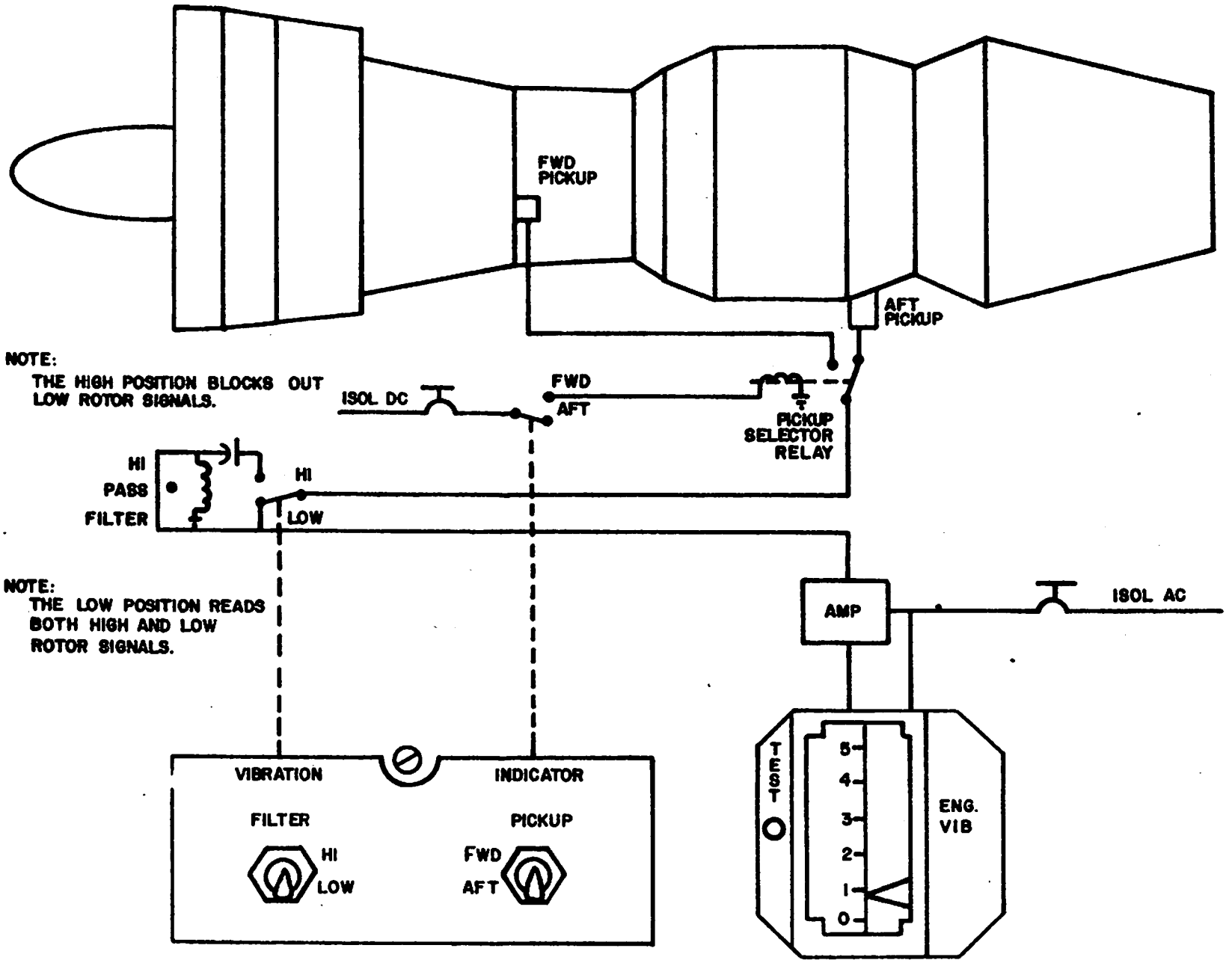
FWD PICKUP
AFT PICKUP
NOTE:
THE HIGH POSITION BLOCKS OUT LOW ROTOR SIGNALS.
ISOL DC
FWD
AFT
PICKUP SELECTOR RELAY
HI
PASS
FILTER
HI
LOW
NOTE:
THE LOW POSITION READS BOTH HIGH AND LOW ROTOR SIGNALS.
AMP
ISOL AC
VIBRATION
INDICATOR
FILTER
PICKUP
HI
LOW
FWD
AFT
TEST
5
4
3
2
1
0
ENG. VIB

Section IV Engines

TABLE OF CONTENTS

Chapter 1

ENGINE GENERAL

Design Features

The TF33-P-7A power plant has a sixteen-stage axial-flow split compressor; an eight-can, can-annular combustion chamber; and a four-stage axial-flow type turbine. There are two accessory cases on the engine.

Engine Sections

The engine is divided into five operating sections: Compressor (including the fan section), diffuser section, combustion section, turbine section, and the accessory drive sections.

Compressor Section

The compressor section supplies air for combustion, internal engine cooling, and operation of the aircraft pneumatic systems.

The engine has a sixteen-stage, axial-flow split compressor. The air in an axial-flow compressor normally continues through the engine without rotating more than 180 degrees.

The axial-flow compressor has alternate rows of rotating blades and stationary vanes. The rotating (rotor) blades are attached to the compressor shaft. The stationary (stator) vanes are attached to the compressor housing. Each rotor

blade compresses and pushes the air through the stator vanes. The stator further compresses the air and directs it to the next rotor blade. The combination of one stator vane and one rotor blade is one stage of compression.

The front compressor (N_1) consists of nine stages of compression. The first two stages of the front compressor have larger blades than the other stages. These two make up the fan.

The fan is part of the relatively slow-turning front compressor, which allows the fan blades to rotate at the most efficient speed. The outer portion of the fan air is ducted around the engine and exits in a duct surrounding the exhaust nozzle.

The rear or high speed compressor (N_2) consists of 7 stages of compression.

Diffuser Section

The diffuser section, which is secured to the rear flange of the compressor rear case, adapts the air for entry into the combustion chambers. The diffuser section also provides ports for extracting bleed air for use in the bleed air system and in the engine systems.

Combustion Section

The combustion section is composed of an inner combustion liner, a split outer combustion case, and eight burner cans arranged in an annular pattern inside the outer combustion case. The burner cans are located between the inner combustion liner and outer combustion case. They are numbered one through eight in a clockwise direction as viewed from the rear of the engine starting from the 1 o'clock position.

The burner cans are interconnected by means of crossover tubes. As the spark igniters start the flame in the No. 4 and 5 cans, the crossover tubes carry the flame to the other cans.

A fuel drain is located on the bottom rear of the outer combustion chamber case to drain unburned fuel on engine shutdown.

Turbine Section

The turbine section contains a four-stage turbine having a set of nozzle guide vanes located ahead of each turbine rotor, a turbine nozzle case and a turbine exhaust case. The first-stage rotor is the high-speed turbine, which drives the N_2 high-pressure compressor. The second, third and fourth stages of the rotor are the low-speed turbine, which drives the N_1 low-pressure compressor.

Accessory Sections

The main accessory section gearbox is mounted beneath and secured to the diffuser section. The gearbox is driven by the N_2 compressor through a gear train.

Mounted to the accessory section are the:

- Main oil pump
- Engine fuel control
- Engine-driven fuel pump
- CSD
- Starter
- Aircraft hydraulic pump
- Rotary breather
- N_2 tachometer generator
- Oil filter
- Thrust reverser hydraulic pump

The front accessory section is located at the front of the N_1 compressor and is covered by the nose dome. The N_1 tachometer generator and a scavenge pump for the front bearing are mounted on the front accessory section.

Chapter 2

ENGINE BLEED AIR SYSTEM

Introduction

Each engine incorporates an engine bleed system which supplies pressurized air for various pneumatically powered systems on the engine and in the aircraft. Each engine has 16 stages of compression with a 16 to 1 pressure ratio. Compressed air is bled from the inner and outer diameter after the 16th stage. Venturies in the bleed struts limit the inner diameter air bleed to a maximum of 4.6% of the air available. The outer diameter air is limited by duct venturies prior to system components.

At sea level on a standard day, and with the engines operating at TRT, each engine can deliver 200 ppm of bleed air at 220 psig and 420°C. This combined bleed air is sufficient to supply the needs of all the pneumatically operated equipment. However, if the engines are running at less than takeoff power, the pressure, temperature, and amount of bleed air are decreased proportionally. At ground idle, for example, the delivered bleed air is about 40 ppm at 15 psig and 88°C. Each subsystem is completely independent of the other three, and each supplies air for specific functions.

1. High Pressure ID Bleed System
2. High Pressure OD Bleed System
3. Compressor Bleed System
4. Fan Duct Bleed System

High Press ID Bleed System

The function of this system is to supply high pressure heated air for the systems and functions listed below:

1. Environmental System
2. Wing Anti-Icing System
3. Windshield Rain Removal System
4. Engine Starting System
5. Fan Duct Seal Pressurization

ID Air is supplied from:

Two bleed air ports on each side of the engine that manifold together and connect to a collector assembly. . A check valve is installed between the collector assembly and each side of the two manifolds from the bleed ports to prevent

backflow between engines. The air then flows through the bleed air shutoff valve into the crosswing manifold which supplies the aircraft systems requiring pneumatic air. The only system on the engine requiring air from the crosswing manifold is the engine ground starting system.

High Pressure OD Bleed System

The function of this system is to provide high pressure heated air for the following functions:

1. Fan duct seal pressurization
2. CSD oil tank pressurization
3. Zone II cooling air ejections
4. Fuel heater
5. Engine nacelle anti-icing
6. Engine anti-icing

Bleed air from this system is utilized only within each engine, and there is no provision for crossbleeding between engines. Air is taken from two points in the diffusion case just aft of the 16th stage of compression and is branched off to the different components.

One branch is taken off to supply air to the fan duct seal pressure regulator which regulates the pressure to about 24 psig. Another branch is for the CSD oil tank pressure regulator. It maintains a pressure of 7 psig in the CSD tank to prevent foaming of the oil at high altitudes. A third branch supplies air to the Zone II cooling air ejections and a fourth tap-off is for Fuel Heater operation.

Structural and component cooling within zone two is accomplished by ejecting high pressure OD bleed air through ejector ducts located on top of each engine adjacent to the pylons. As air is ejected through these ducts, a low pressure area is formed at the top of each engine which in turn draws ambient air into the zone two area through louvers in the bottom forward section of each engine cowling. This cooling air is then discharged overboard along with the OD air as it circulates upward. Zone II cooling operates from ground level through 20,000 feet and is controlled by a solenoid operated shutoff valve which receives power from the Isolated DC bus.

The nacelle and engine anti-icing systems for each engine are referred to as running wet systems, which turn ice to water before it is allowed to accumulate. The pneumatic portions of the two systems are separate, but both are controlled electrically by one switch for each engine, located on the pilot's overhead panel. Both systems for the engines are controlled by the ice detector system when in the automatic mode of operation.

The bleed air supply for the nacelle anti-icing system is extracted from a port on the upper right side of the engine diffusion section. The air flows from the port, through a venturi, to a shutoff regulator valve. The venturi limits the maximum amount of flow that can be extracted from the port. The shutoff regulator valve is solenoid controlled but uses bleed air for operation. The pressure regulator assembly regulates the position of the valve, maintaining a downstream pressure of 17 psig. The system has an over-pressure relief of approximately 40 psi.

The bleed air for the engine anti-icing is also extracted from a port on the diffuser section. Control of the extracted air flow is by means of an air flow regulator and a motor-operated shutoff valve. The purpose of the regulator valve is to provide sufficient air to control icing, with a minimum increase in inlet air temperature. This avoids damage to the inlet guide vanes. The regulator has an internal valve which is controlled by a bimetallic spring. After the regulator valve, the air flows to the shutoff valve. The shutoff valve is a motor-operated butterfly valve.

Compressor Surge Bleed System

The engine compressor surge bleed system controls and operates two surge bleed valves, whose function prevents or minimizes a compressor stall or surge condition by providing an escape port for excessive compressor air. The valves, when open, permit air pressure at the twelfth stage of the engine compressor to escape into the left and right fan ducts. The valves are located on the left and right sides of the compressor intermediate case. The valve on the right side, approximately 6" in diameter, is known as the starting bleed valve. This valve is open whenever the engine is operating below 80% N_2 RPM, or during a sudden power reduction from high power operation.

The valve on the left side of the intermediate case is approximately 4 3/4" in diameter and is known as the deceleration bleed valve. This valve opens only when the engine power is suddenly reduced. This valve is controlled and operated the same as the 6" valve.

Components used in the system to operate the bleed valves are two bleed valve actuators, a pressure ratio and bleed reset control unit, an accumulator, and a 20 psi check valve. During starting or at power settings below 80% N_2, 16th stage OD pressure and spring tension is used in the bleed valve actuator to keep the 6" bleed valve open. In the 4 3/4" bleed valve actuator, 16th stage pressure and spring tension keeps it closed. As the N_2 RPM increases above 80%, the pressure ratio unit vents shuttle valve pressure from the 6" acutator, allowing it to shift. This action ports 16th stage air to the close side of the power piston in the actuator, closing the bleed valve and preventing 12th stage air from escaping to the bifurcated duct. During slow power reduction below 80% N_2, the action is reversed. On rapid power reduction, 16th stage air pressure for operation is reduced. In order for the system to operate efficiently, an accumulator was installed. The accumulator stores air pressure until the Pressure Ratio unit senses a rapid pressure change, as when the power is suddenly reduced. Then air pressure from the accumulator overrides spring tension on a diaphragm in the bleed reset controller, venting the closing signal pressure for both bleed valve actuators to atmosphere. Accumulator pressure is also supplied to the pilot valve in the 4 3/4" bleed valve actuator, shifting it to allow air pressure

to be ported to the open side of the actuator. Then accumulator pressure flows through the 20 psi check valve to assist 16th stage pressure in opening both bleed valves and to revive 12th stage air. As the pressure in the accumulator drops below 20 psi, the 20 psi check valve closes, trapping the remainder of the pressure in the accumulator in order to reduce the amount of time the bleed valves are open. The reduction of opening time is important when full power is needed immediately after a sudden power reduction, such as in a rejected take-off, when full thrust reverse is used.

Fan Duct Bleed System

Fan duct bleed air is used for cooling the generator, Zone I of the nacelle, and engine and CSD oil. Air for cooling the generator is extracted from the forward fan case. Air for cooling Zone I, CSD oil and engine oil is taken from the aft fan ducts.

The primary purpose of the Zone I cooling system is to maintain structural temperatures below design limits. Air is extracted from the upper areas of each fan duct and distributed within the compartment by piccolo tubes. Flow within each system is continuous as long as the engine is operating. Cooling air is then discharged overboard through louvers on the bottom aft section of the engine cowling.

Chapter 3

STARTER AND IGNITION SYSTEM

Each engine is equipped with a self-contained starting system consisting of the following components:

1. Pneumatic ducting
2. Starter control valve
3. Starter
4. Ignition system

The engine starter is used while the aircraft is on the ground. Air starts are made with the engine windmilling and without the aid of the starter. The starter uses pneumatic air supplied through the crosswing manifold for operation. Any source of air that is normally supplied to the crosswing manifold may be used in the starter system. The electrical power for the starter system is supplied through the Isolated DC bus.

Pneumatic Ducting

The ducting is routed from the crosswing manifold, through the engine pylon, to the engine high pressure ID air manifold. Two check valves prevent air from entering the engine and allow it to be supplied to the starter system only.

Start Control Valve

The starter control valve acts as an air pressure regulator for the starter and as an air shutoff valve when the starter is not being used. The valve regulates the air pressure for the starter to approximately 40 psi. In the event of a valve failure, a pressure relief valve incorporated within the control valve limits the maximum pressure to the starter to approximately 45 psi, when open. A switch on the valve completes an electrical circuit to a "Starter Valve Open" light on the pilots' center instrument panel. The light will remain on until the valve is closed.

Starter

The starter has its own 11-ounce oil system for lubrication. It is independent of the engine oil system but uses the same type MIL-L-7808 oil. High pressure air, regulated by the starter control valve, enters the starter turbine, causing it to rotate. The air is then discharged into the engine nacelle. The turbine drives a starter shaft to the engine through the starter gear train and clutch assembly. When the starter reaches a predetermined speed, between 35 to 45% N_2 RPM, a centrifugal cutout switch on the engine side of the starter clutch will actuate, causing the starter control valve to close. The engine will continue to accelerate, and the starter turbine and gear train will slow to a stop.

At approximately 40% N_2 RPM, when the starter control valve closes, the starter turbine speed is about 70,000 RPM. In the event of a malfunction, resulting in turbine failure, a turbine guard ring and an exhaust screen are designed to absorb some of the energy of the metal fragments which result from turbine disentegration.

Ignition System

The igniter exciter is a single housing unit containing the 20-joule and the 4-joule systems. The 20 joule is an intermittent duty, dual discharge system. The 4 joule is a continuous duty, single discharge system, used after engine start, when necessary. Both sections have independent circuits, requiring a power input for each section and output leads to each spark igniter. There are only two spark igniters, one located in the No. 4 combustion chamber can, the other in No. 5 combustion chamber can.

When the 20 joule is used, 28 volts DC power is supplied to the 20-joule intermittent exciter from the isolated DC bus. From there it is routed through a series of filters to eliminate radio interference during operation. From the filters, power travels to the trigger generator, which increases the voltage to approximately 2450 volts and applies it to the trigger output circuit. There it is increased to a point where it will ionize the gap of the spark igniters.

When the continuous ignition system is placed on, 115 VAC from the No. 1 essential bus is sent to the continuous duty ignitor exciter, where it is directed through its own set of radio noise filters. From there it goes through a full wave transformer rectifier which increases the voltage slightly and converts it to DC. This increased DC voltage enters a voltage doubler which boosts the voltage to approximately 300 VDC and sends it to the trigger generator which also increases the voltage. This power is then supplied to the trigger output circuit which will ignite the spark igniter in the No. 4 combustion chamber can.

Chapter 4

THRUST REVERSER SYSTEM

Each engine is equipped with an independent thrust reverser system, operated through the throttle quadrant. The system permits reverse thrust application of engine power after touchdown and during rejected takeoff.

Each thrust reverser system consists of a hydraulic pump, filter, two acutators, two doors and a mechanical linkage, a control assembly, a flow regulator, a mechanical lockout, and indicator lights.

Oil for acutation of the system is taken from the CSD oil tank. The oil is circulated through the thrust reverser system, then ported through the CSD oil cooler and back to the reservoir.

A dual element engine-driven hydraulic pump provides hydraulic pressure for operation of the thrust reverser system. The pump assembly consists of a high-volume pump, a low-volume pump, an unloading valve, an unloading pilot valve, and check valves. The high and low-volume pumps are attached to a common shaft so both will operate at the same speed. Both are fixed displacement, gear-type pumping units. At idle speed, the high-volume pump will deliver approximately 5.5 gallons per minute at 2,500 psi. The low-volume pump will deliver .5 gallons per minute at 3,000 psi. The unloading valve permits the high-volume pump output to be ported to a return line, except during thrust reverser operation. This is to insure rapid operation of the thrust reverser doors. The output of the low-volume pump is used to cool the system while the doors are in the closed and locked position. The control assembly determines the system pressure and direction of flow for thrust reverser door operation.

Two hydraulic actuators are used to supply the force and motion necessary to retract and extend the target-type thrust reverser doors. The actuators are located at the top and bottom on the aft end of the nacelle. The actuators operate both doors, and are connected to a common oil pressure source.

To monitor thrust reverser operation, there are three indicating lights per engine, a PRESSURE light located on the engineer's panel, a THRUST REVERSER NOT LOCKED light, and a THRUST REVERSER EXTENDED light on the pilot's center instrument panel. The PRESSURE light will come ON when the pressure in the control assembly reaches approximately 1000 psi. The THRUST REVERSER NOT LOCKED light, located on the pilot's panel, will come ON at the first movement of the doors out of the locked position. The EXTENDED light will come ON when the doors have fully extended.

An interlock system is installed to prevent throttle movement if the thrust reverser doors are not fully extended. The mechanical linkage to the fuel control will be blocked until the thrust reverser doors are fully extended.

Chapter 5

ENGINE OIL SYSTEM

The TF33-P-7 engine is lubricated by a high-pressure, self-contained, dry sump oil system. It provides lubrication for engine bearings, bearing seals, accessory drive shaft, and accessory gear housing. Components included in the system are:

1. Oil tank
2. Oil temperature indicator
3. Pressure pump
4. Pressure relief valve
5. Oil filter
6. Oil coolers
7. Scavenge pumps and vent system

Oil Tank

The oil tank is a steel saddle type located on the upper forward right side of the engine and is serviced through a cowling access panel. The tank capacity is 7.8 gallons but can be serviced to only 6.0 gallons, due to the filler neck being placed in a position to prevent overservicing. This leaves approximately 1.8 gallons of total tank volume for air expansion. The tank contains internal baffles and plates to prevent the oil from sloshing, a can type de-aerator to prevent aeration of the oil returning to the tank, and near the one-gallon usable level, a float operated switch. If the oil quantity in the tank decreases to approximately one gallon of usable oil, the float switch will complete an electrical circuit to a "Low oil quantity" light on the flight engineer's panel.

Oil Temperature

The oil temp bulb is located downstream of the filter in the pressure passage on the filter housing. It senses temperature of the oil going to the engine bearings and accessory drive gears. This signal is then routed to the temp indicator on the flight engineer's panel.

Oil Pump

The pressure pump is a dual element, positive-displacement pump located in the accessory gear housing. The two elements are the main pressure pump and a scavenge pump. The speed of the pump will vary with N_2 RPM. At 100% N_2 RPM, the pump speed is approximately 3300 RPM, with a pressure output of about 80 psi. This pressure is regulated to prescribed limits by a pressure relief valve.

Pressure Relief Valve

The oil pressure relief valve is a continuous bypass, pressure relief valve, located on the accessory gear housing adjacent to the oil pump. The valve will open and close to maintain desired system pressure by spring tension against a valve seat. System pressure may be adjusted by a screw which changes the amount of tension on the valve spring. When the oil pressure increases above normal, the valve will open and bypass oil back to the inlet side of the pressure pump. The oil pressure is sensed by an oil pressure transmitter and a low oil pressure switch. The oil pressure transmitter sends a signal to a pressure indicator located on the flight engineer's panel. Should the oil pressure drop below 33 psi, the low oil pressure switch will complete an electrical circuit to a "Low Oil Press" light on the Pilot's center instrument panel. The light will remain on until the pressure increases to approximately 38 psi.

Oil Filter

The main oil filter is located in the accessory housing above the oil pump. It is constructed with a series of screens between wafer disks, designed to trap contaminants and supply clean oil to the engine components. At the bottom of the oil filter housing is a spring-loaded poppet valve. Under normal operation, oil flows through the filter with enough pressure to overcome the spring tension on the poppet valve, allowing clean oil to flow to the engine bearings. Under static conditions, spring tension will close the valve and will not allow oil flow from the tank into the accessory housing, causing an overflow of oil out the housing vent.

The second valve in the oil filter housing is a bypass valve. In the event the filter becomes clogged, pressure on the inlet side becomes greater than pressure from the outlet. When this differential pressure reaches 50 psid, the bypass valve will open and a differential pressure switch will actuate and complete a circuit to the "Low Oil Pressure" light on the pilot's center instrument panel. The system pressure gage should indicate normal if the filter is clogged.

Scavenge and Vent System

The engine oil system is a dry sump type, unlike the wet sump system because it doesn't allow the oil to pool at the bottom of the engine. The engine has 5 gear-type scavenge pumps that pick the oil up from the bearing compartments and accessory housing and send it back to the oil tank. The combined output of the 5 scavenge pumps is approximately twice the output of the pressure system. As the scavenge system picks up oil and air from the housings, the two are mixed together. This mixture of air and oil goes through the system until it gets to the can type de-aerator in the tank, where the air is removed to the vent system. As oil is being sprayed on the bearings, some of it becomes vaporized with the air in the bearing housing. This air-oil mixture is too light to be picked up by the scavenge system, so it escapes into the vent system that collects vaporized oil from all the bearing housings. It then goes to the air-oil separator in the main accessory housing. The air-oil separator removes the air from the oil, venting the air overboard and leaving the oil to be picked up by the scavenge pump in the accessory housing.

Oil Coolers

The scavenge system takes the oil from the bearing and accessory housing and sends it through two oil coolers before it is returned to the tanks.

Air Oil Cooler

The air-oil cooler is a radiator-type, located in the right side of the engine fan discharge duct. Fan discharge air flows across the radiator to cool the oil. The cooler is equipped with a pressure relief and temperature bypass valve. If the cooler becomes clogged, the pressure relief valve is designed to open at 23 psid and allow the flow to continue. The temperature bypass valve controls the amount of oil flowing through the cooler by opening at 60°C or below so no oil flows through the cooler. As the oil temperature increases, the valve closes, sending an increasing amount of oil through the cooler until the temperature reaches approximately 77°C, when the valve closes fully, sending all oil through the cooler.

Fuel Oil Cooler

The fuel oil cooler is located on the forward right side of the engine. It works on the same principal as the air oil cooler, with the exception that fuel is used as the cooling agent, instead of air.

It contains a pressure relief and temperature bypass valve similar to the air oil cooler. The main differences are the bypass pressure will be 40 psid should the cooler become clogged and the oil temperature must rise to 90°C before all oil passes through the cooler.

Chapter 6

ENGINE FUEL SYSTEM

General

The engine fuel system provides clean, vapor-free fuel to the fuel nozzles at pressures and flow rates required to develop the correct engine power for all operating conditions. The system compensates for variations in altitude during flight, limits the acceleration fuel flow to prevent "surging," and establishes a minimum fuel flow to prevent flameout of the engine during deceleration.

The engine fuel system consists of (1) a dual-element engine-driven pump, (2) fuel heater, (3) fuel filter, (4) fuel shutoff actuator, (5) fuel control, (6) fuel flow transmitter, (7) fuel oil cooler, (8) pressurizing and dump valve (9) fuel nozzles, and pressure switches.

Fuel Pump

After the fuel passes the pressure switch, it enters the engine-driven fuel pump. The pump is a dual-element unit, mounted on the left side of the main accessory drive gearbox. The two elements are driven by a common shaft. The first stage of the pump is an impeller assembly which acts as a boost pump for the second stage. A built-in bypass valve between the first and second stages bypasses fuel directly to the second stage in the event of a first-stage malfunction.

The second stage of the engine-driven fuel pump is a positive displacement gear type pump designed to deliver a flow regardless of the pressure demand. Fuel from the impeller stage passes through the fuel heater and filter assemblies, then enters the gear stage through a second filter installed in the pump. A high-pressure relief valve relieves pump output pressure above approximately 1050 psi.

Fuel Pump Out Warning System

Connected across the impeller stage of the engine-driven fuel pump is a differential pressure switch. This pressure switch controls the engine PUMP OUT light on the engineer's fuel management panel. One warning light is provided for each engine. If the output of the impeller stage decreases to 10 psid, the pressure switch will illuminate the warning light.

Fuel Deicer Heater

Fuel leaving the first stage is ported into the fuel heater through external tubing. The fuel deicing heater is mounted on the left side of the engine compressor case. The heater consists of an air chamber surrounded by a fuel jacket. Engine bleed air is circulated through the air chamber. The heat from the air is transferred to the fuel circulating in the fuel jacket. During engine operation, all of the fuel from the first stage passes through the fuel heater. Airflow through the heater is controlled by a motor-operated valve. The valve is

controlled by the fuel heater switch on the engineer's fuel management panel. One switch is provided for each heater. A light above each switch illuminates when the valve opens.

Fuel Filter

Fuel leaving the fuel heater is directed into the fuel filter. The fuel filter is located on the left side of the compressor intermediate case. Should the filter become clogged, a built-in bypass valve will bypass the fuel around the filter. During a clogged condition, differential pressure across the filter will be sensed by a differential pressure switch. If the differential pressure reaches 8 psid, the switch closes and illuminates the FIL BYPASS light on the engineer's fuel management panel. When the pressure reaches 12 psid, the bypass valve opens and the fuel flows around the filter. If the clogged condition relieves itself, the bypass valve will close and normal operation will resume.

Fuel Control

After leaving the filter, the fuel flows into the second stage of the engine-driven fuel pump. After leaving the second stage of the pump, the fuel flows through the fuel control.

The fuel control is a fuel flow metering unit which controls engine power under all operating conditions. Control is provided in both the forward and the reverse power ranges.

The control is an engine-driven, hydro-mechanical unit located on the forward right side of the main accessory gearbox. Two levers are provided on each fuel control. The power lever (throttle lever) is used for selecting engine thrust in the range from full reverse, through idle, to takeoff. The second lever is the electrically actuated shutoff lever which controls fuel for engine starting and shutdown.

Also incorporated in the fuel control is a solenoid valve which provides fuel enrichment for cold weather starting.

The fuel control schedules fuel to the engine to (1) control steady-stage rpm, (2) maintain a constant turbine inlet temperature for each position of the throttle, (3) prevent over-temperature and compressor "surging" during starting and acceleration, (4) prevent flameout during deceleration, and (5) reschedule for a change in ambient air pressure.

The fuel control accomplishes all of this by signals from the following sensors: (1) A burner pressure sensor which reflects airflow in the combustion section of the engine, (2) an RPM sensor which monitors speed of the N_2 compressor, (3) the power lever angle sensor which reflects engine power requirements by throttle position and (4) an ambient pressure sense.

The metered fuel leaves the fuel control through the fuel shutoff valve, which is controlled by the fuel and start ignition switch. Then it flows to the fuel flow transmitter and fuel oil cooler, on its way to the engine.

Pressurizing and Dump Valve

Fuel leaving the fuel-oil cooler flows into the fuel pressurizing and dump valve. This valve consists of a fuel inlet check valve, a self-relieving filter, a manifold dump valve, and a pressurizing valve.

The fuel inlet check valve is located in the inlet port of the pressurizing and dump valve. A fuel inlet pressure of eight to ten psi is required to open the inlet check valve. The valve prevents fuel from draining overboard from the fuel-oil cooler when the engine is not operating.

The pressurizing and dump valve is divided into primary and secondary chambers. The fuel manifold feeding the fuel nozzles has primary and secondary manifolds. The primary chamber of the pressurizing and dump valve flows fuel into the primary manifold for engine starting and low power operation. As the engine is accelerated, the fuel pressure increases. At approximately 250 psid, the pressurizing valve opens, allowing fuel flow into the secondary chamber and secondary fuel manifold.

The manifold dump valve is spring-loaded open and closed by fuel pressure from the fuel control. When the engine is shut down, the dump valve opens, draining the primary and secondary fuel manifold overboard.

Fuel Enrichment

Fuel enrichment is used with alternate grade fuel during ground engine starts with low fuel temperatures, or during air starts at high altitudes with alternate grade fuel.

When the fuel enrichment switch on the pilot's overhead panel is actuated, extra fuel is added to metered fuel, in the fuel control, for easier engine starting. The system cuts off when the fuel flow reaches approximately 1500 pounds per hour, (4000 N_2 RPM), or the fuel enrichment switch is placed to off.

Chapter 7

AUXILIARY POWER UNIT

The APU, located in the left wheel well, supplies air for engine starting, air for the environmental systems, and mechanically drives an AC generator, identical to the main generators, for ground operation only. The APU controls receive power from the Isolated DC Bus through circuit breakers on the flight engineer's No. 3 circuit breaker panel.

The APU is started by a hydraulic motor which receives its power from two accumulators. These accumulators are pressurized from Hydraulic System No. 3 and controlled by the APU ACCUM SEL switch which permits selection of No.1, No. 2, or both accumulators for starting. A 10-cubic-inch surge accumulator is used in the system to absorb the initial surge of pressure, protecting the clutches in the starter adapter.

Speed of the APU is controlled by the fuel governor which regulates the fuel flow to maintain a constant speed under varying load conditions. If a malfunction occurs in the fuel governor and the speed of the APU exceeds 110 percent, a centrifugal speed switch will automatically close the fuel feed valve and shut down the APU.

The APU control switch is a three-position, OFF-START-RUN rotary switch. Placing the switch to START closes the self-holding start relay. This relay will remain closed until the circuit is opened by the centrifugal speed switch at 35 percent. When the switch is released from START, it will move to RUN by spring-action. When the switch is at RUN, all APU controls are energized and controlled by their automatic controls.

The APU door control switch is a three-position, OPEN-OFF-CLOSED switch. The doors must be fully open before the APU can be started. Automatic closing is initiated by pulling the fire control handle or by actuation of the touchdown relays. If the aircraft becomes airborne with the APU running, the APU will shut down. When the APU oil pressure drops below 3.5 psi, the doors close.

The bleed load and flow control valve switch controls the solenoid-operated bleed air valve. The switch is interlocked with a 95 percent speed switch which prevents a bleed load from being applied to the APU until it reaches operating speed. Placing the switch to OPEN will supply air to the crosswing manifold.

There are two FIRE PULL handles for the APU, one on the flight engineer's panel and one in the cargo compartment. When either handle is pulled, the APU shuts down, the doors close, and the corresponding fire extinguishing agent discharge switch is armed.

The indicators for the APU consist of three lights and an exhaust gas temperature (EGT) indicator. The START light illuminates to indicate that the starter is operating. The light goes OUT when the APU reaches starter cutout speed. The ON SPEED light illuminates to indicate the APU is operating at 95 percent. The door warning light illuminates to show NOT CLOSED when the APU doors are not closed.

Oil from an externally mounted oil tank is delivered through the oil pump mounted on the accessory case. A relief valve maintains desired oil pressure. Temperature is maintained by an oil cooler. An oil temperature switch automatically shuts the APU down if the temperature exceeds 120°C. A low oil pressure switch automatically shuts the APU down if the pressure drops below 55 psi while operating above 95%. A sequencing switch is actuated at approximately 3.5 psi when starting and completes the circuit to the ignition unit. During APU shutdown, the door closing circuit is completed through the switch when the oil pressure drops to approximately 3.5 psi.

The APU fuel system provides for proper flow during starting, acceleration, and ON-SPEED operation. Fuel gravity flows from the No. 2 main tank surge box. A motor-driven shutoff valve is located in the line at the tank outlet and is energized open whenever the APU control switch is in the RUN or START position. Placing the control switch OFF or pulling the APU fire control handle will close the motor-driven shutoff valve. The acceleration control valve provides the proper fuel metering for starting and acceleration to ON-SPEED RPM. The governor has no control over fuel flow until the APU is at or near ON-SPEED RPM. At this time the governor increases or decreases the fuel flow to keep the turbine speed relatively constant. A solenoid-operated shutoff valve is located in the metered fuel line and provides control of flow to the fuel nozzle during operation and shutdown. The valve is energized open and spring-loaded closed. During the starting sequence, as oil pressure increases above 3.5 psi, this valve becomes energized. Several means are available to de-energize the valve; they include:

- Placing the APU control switch to OFF
- APU overspeed of 110 percent or greater
- Low oil pressure
- High oil temperature

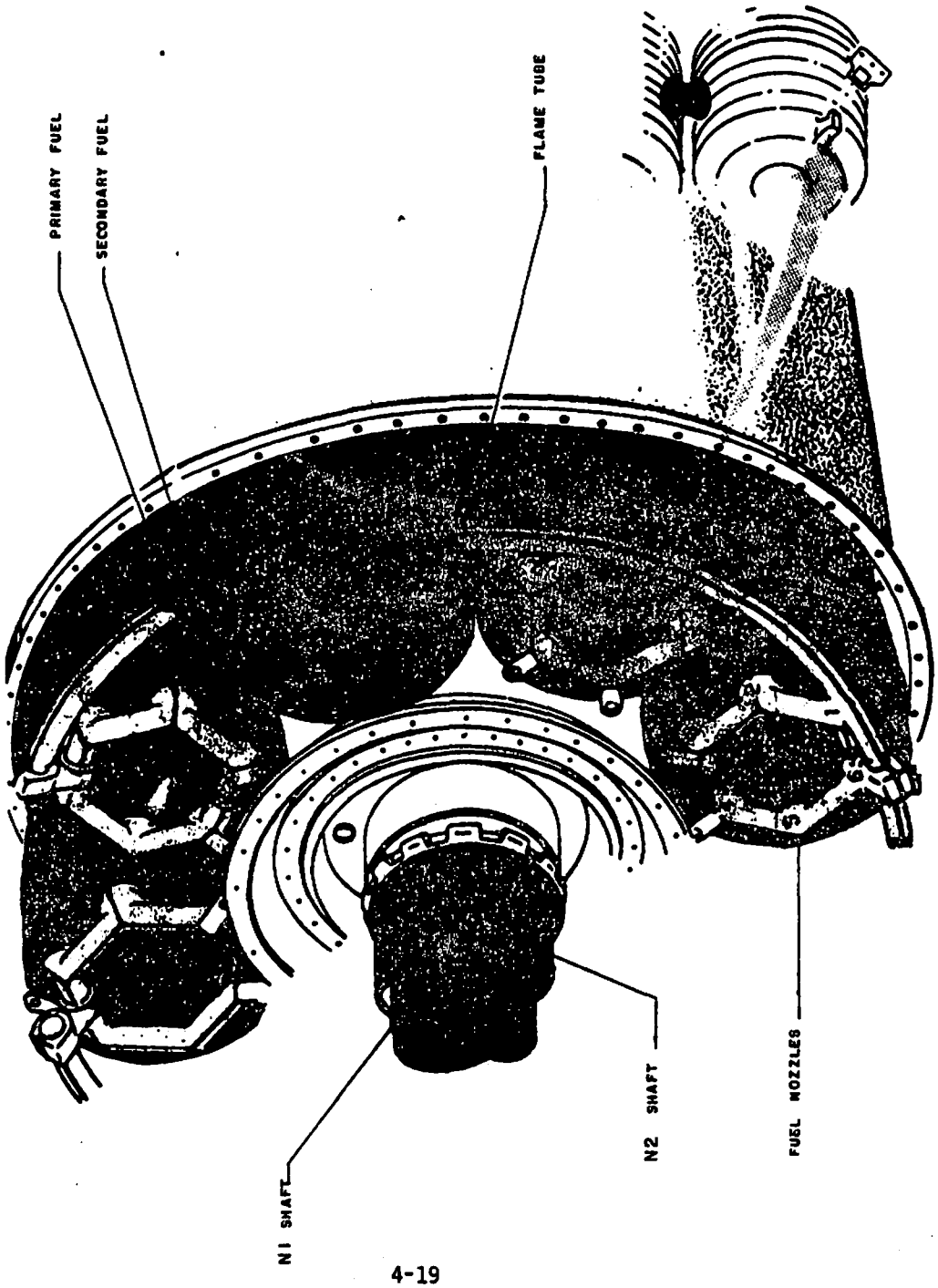

CAN ANNULAR COMBUSTION CHAMBER

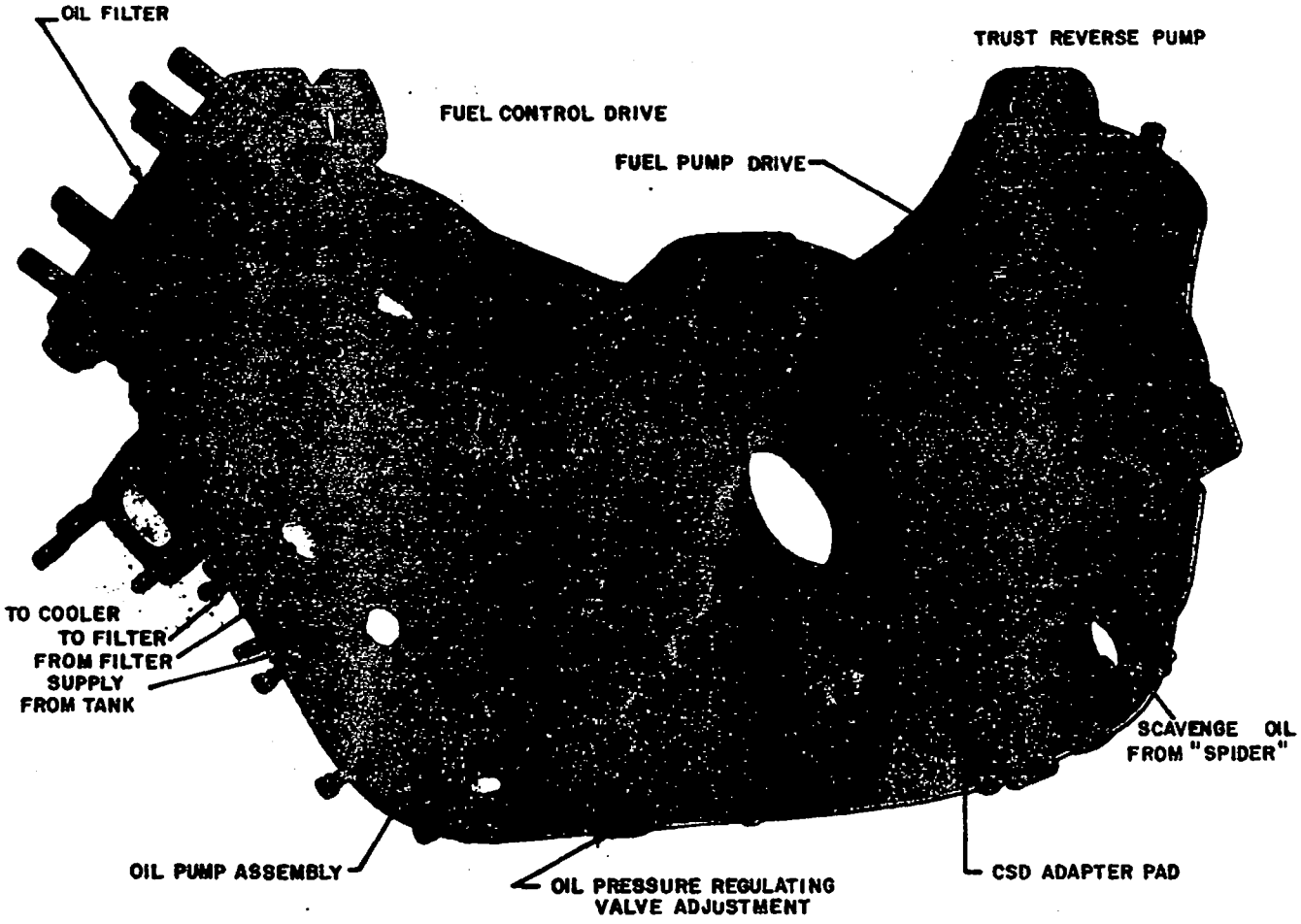

ENGINE ACCESSORY DRIVE GEAR BOX (FRONT VEIW)

COMPRESSOR BLEED SYSTEM SCHEMATIC

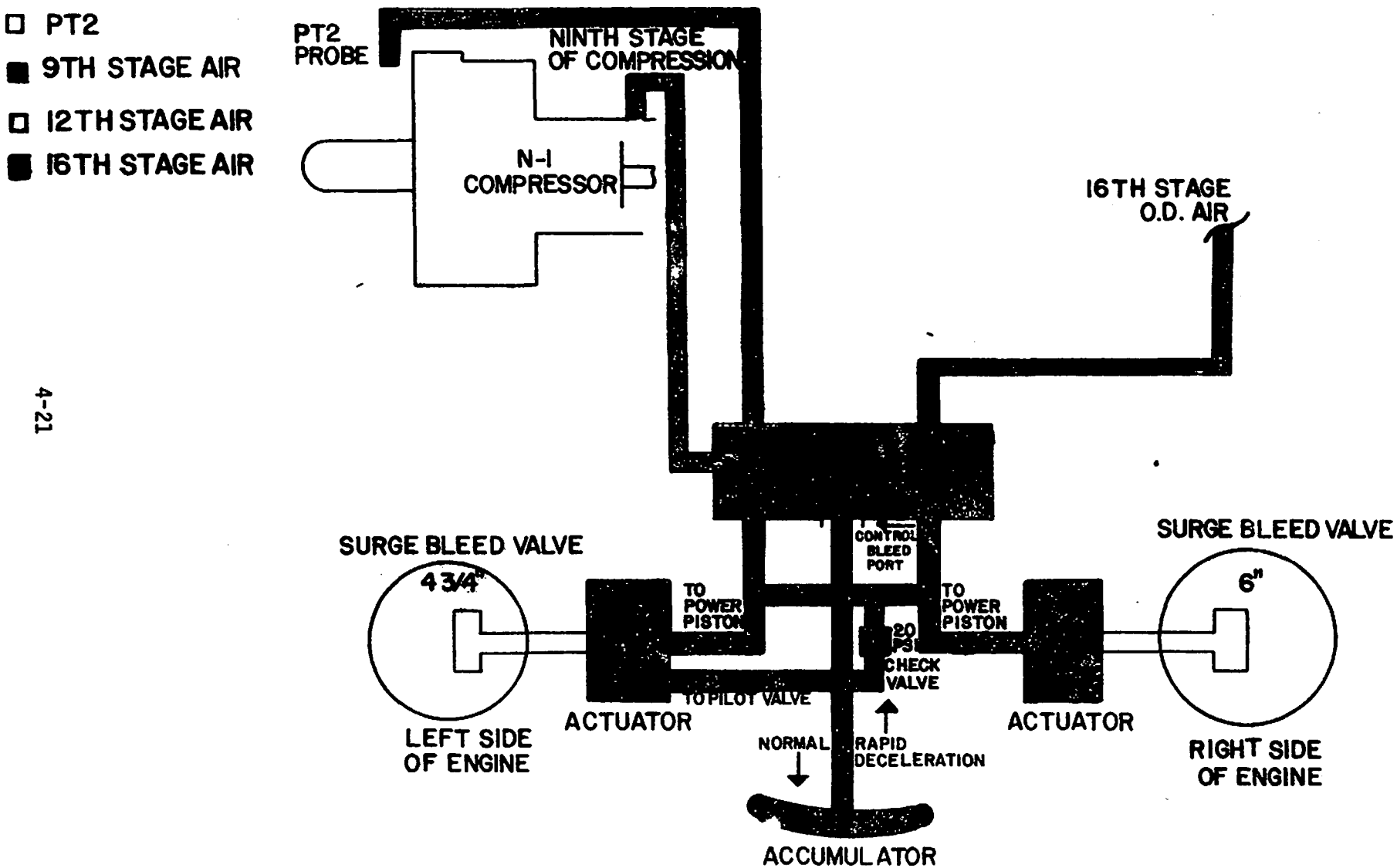

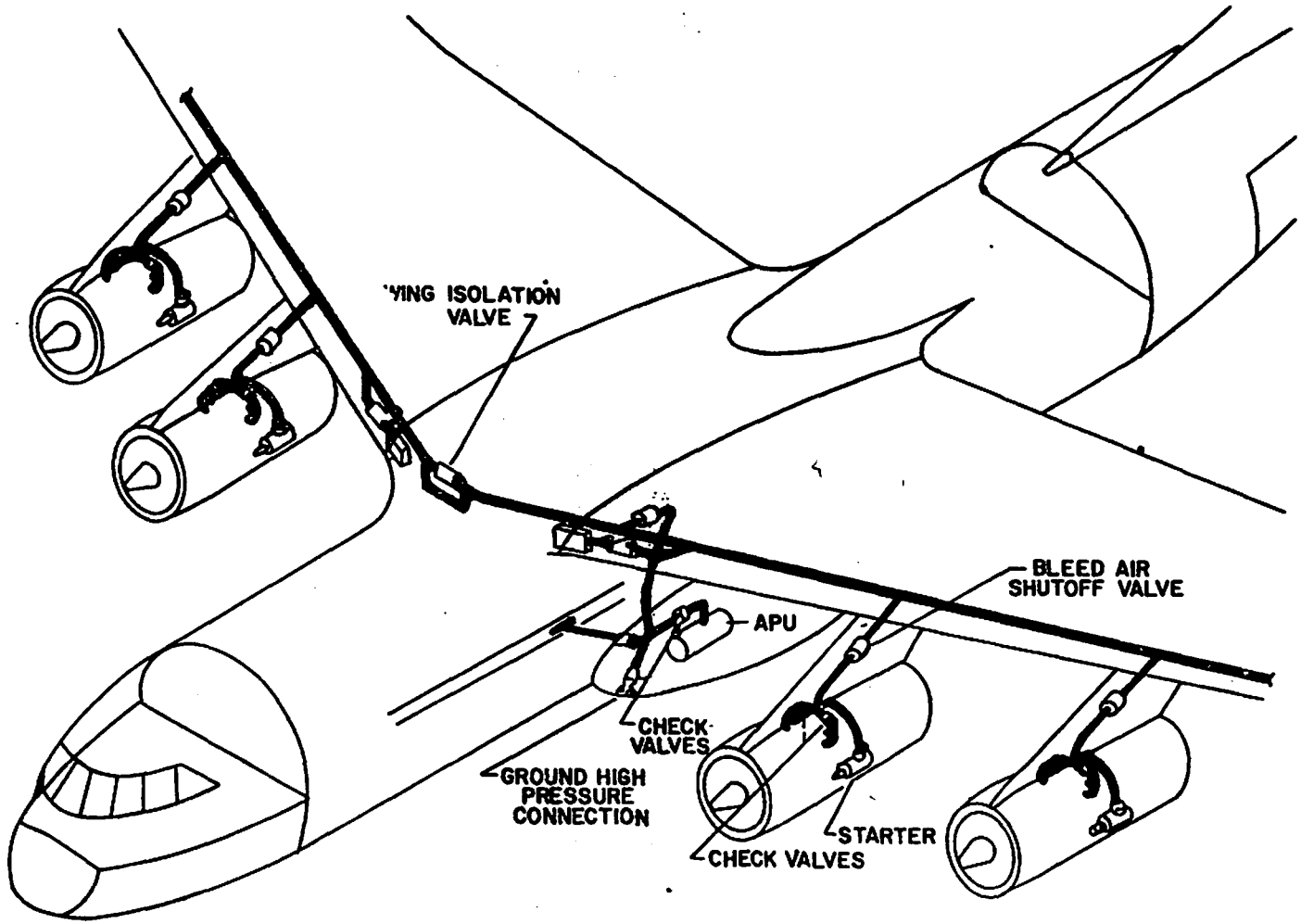

BLEED AIR SYSTEM COMPONENTS

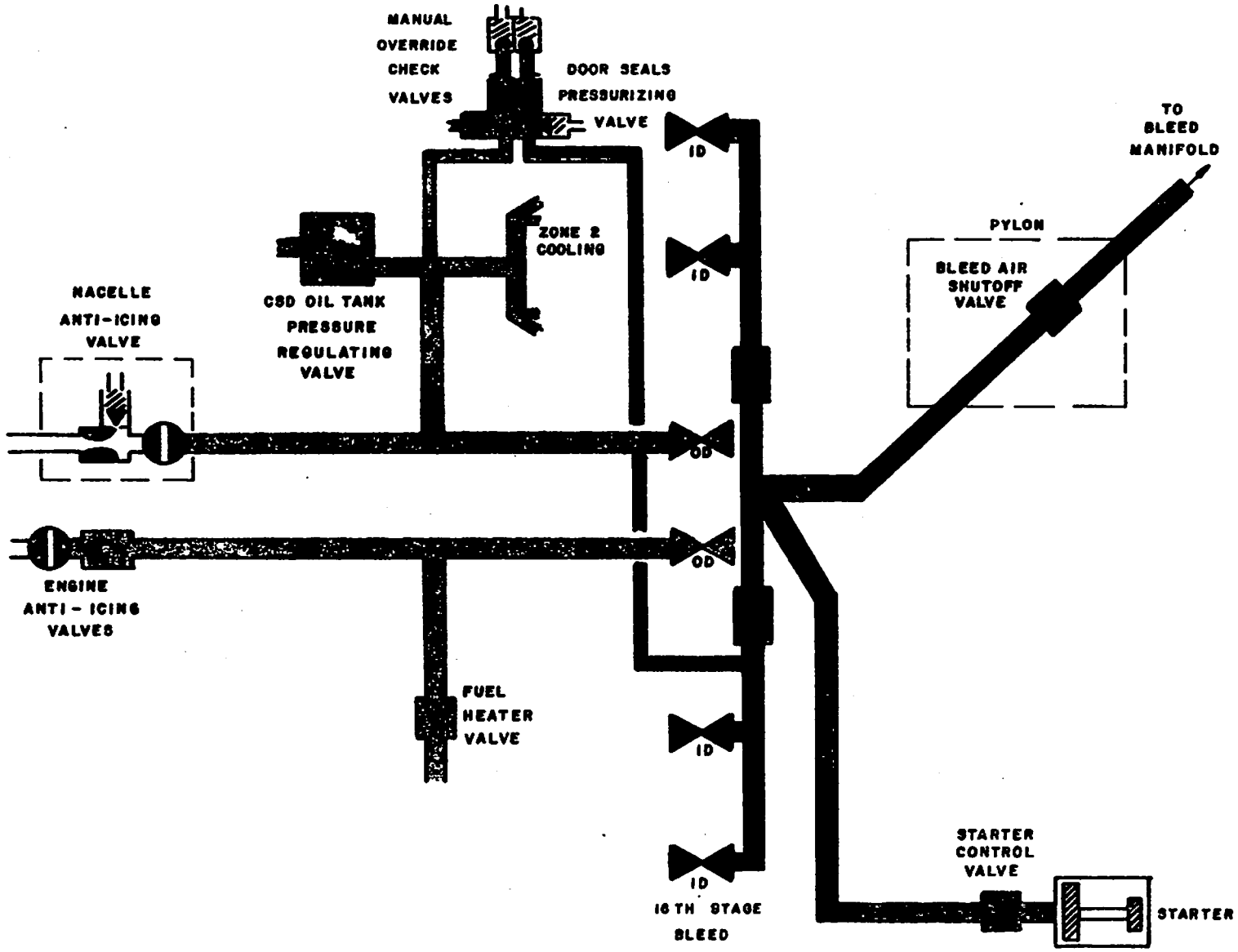

ENGINE BLEED SYSTEM SCHEMATIC

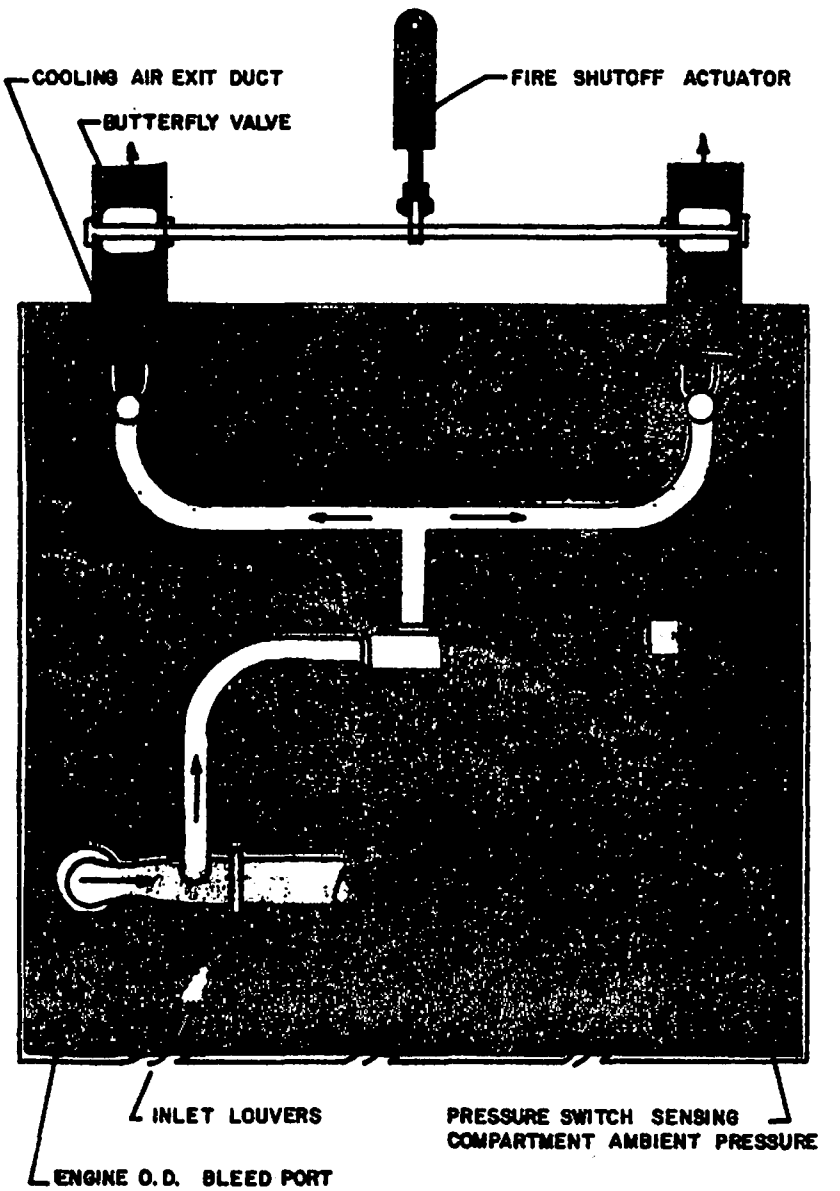

ZONE II COOLING SYSTEM SCHEMATIC

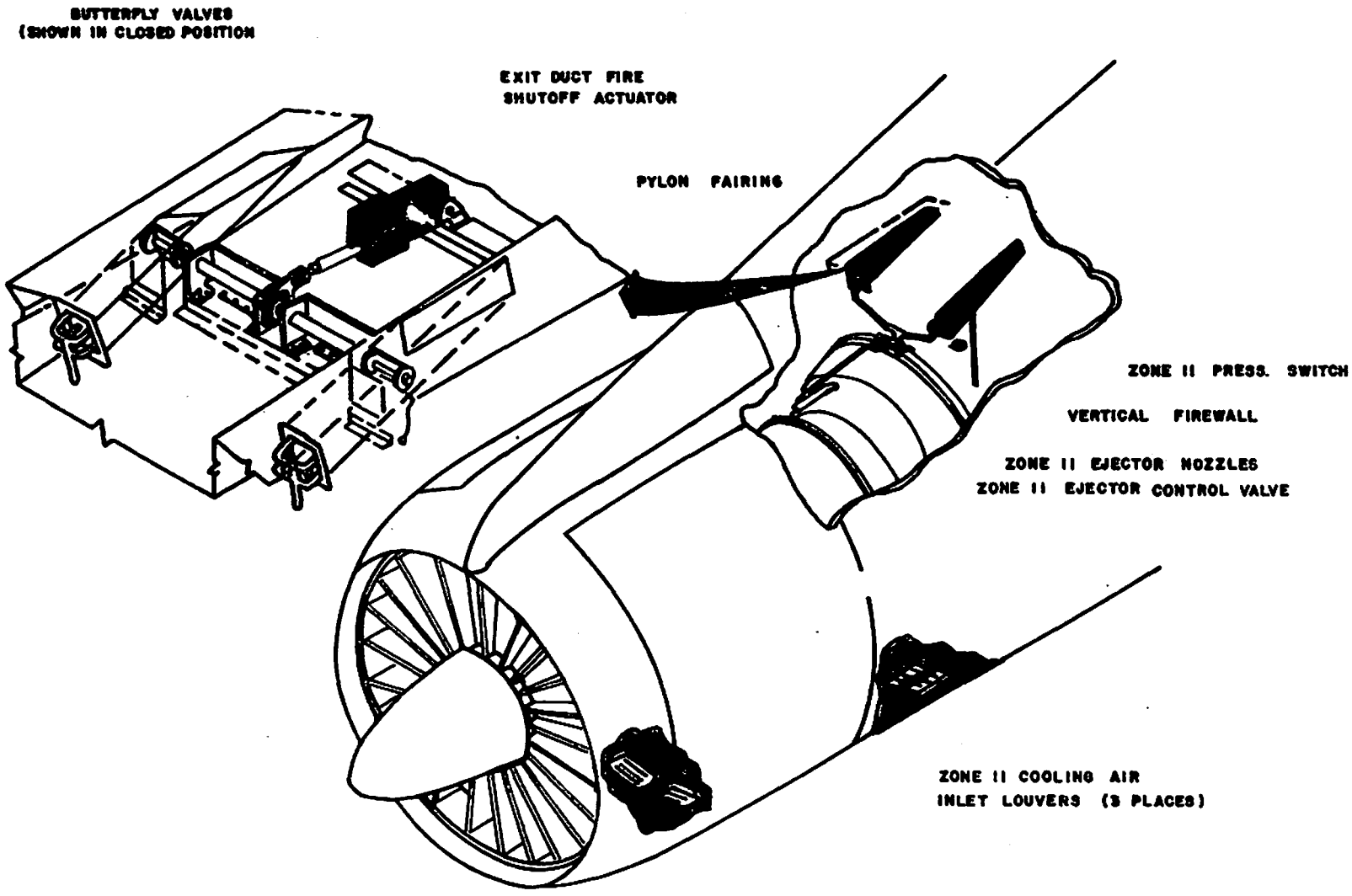

ZONE II COOLING SYSTEM COMPONENT LOCATIONS

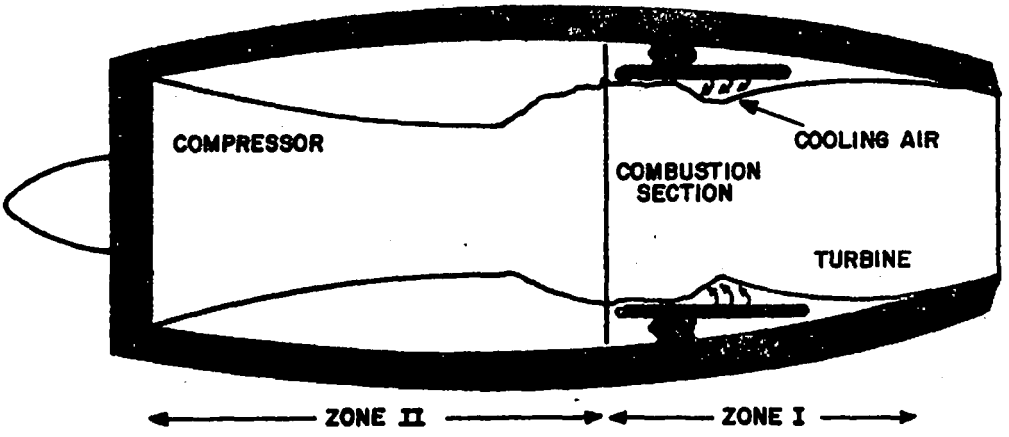

As viewed from the top of the engine

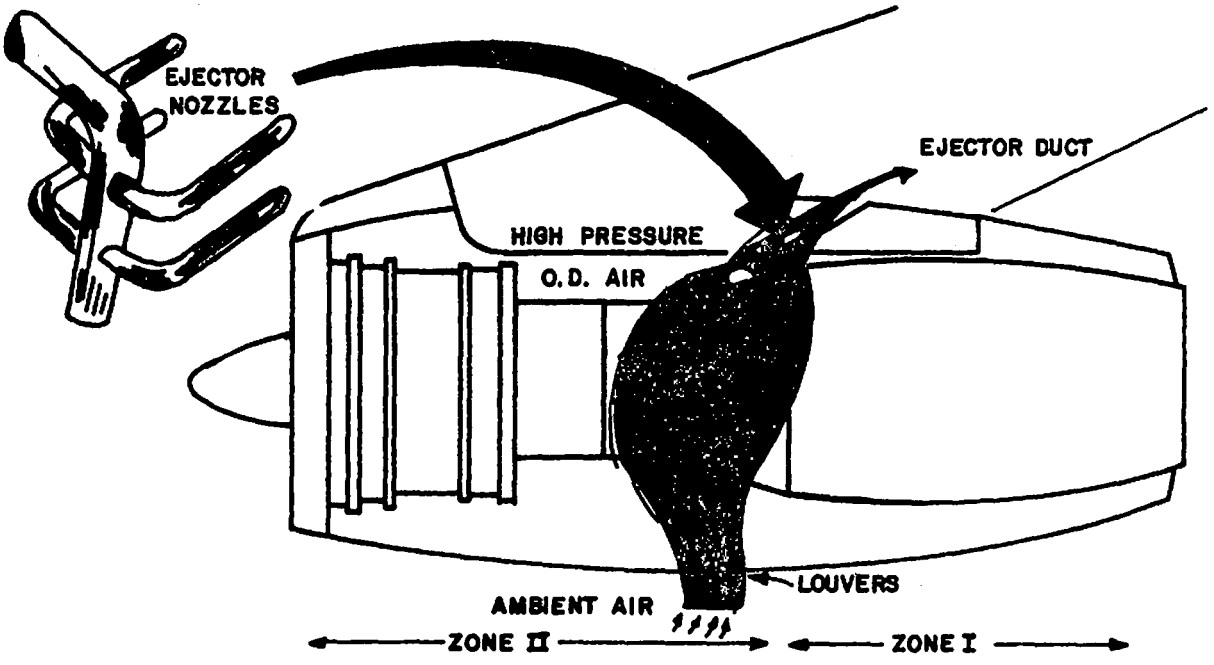

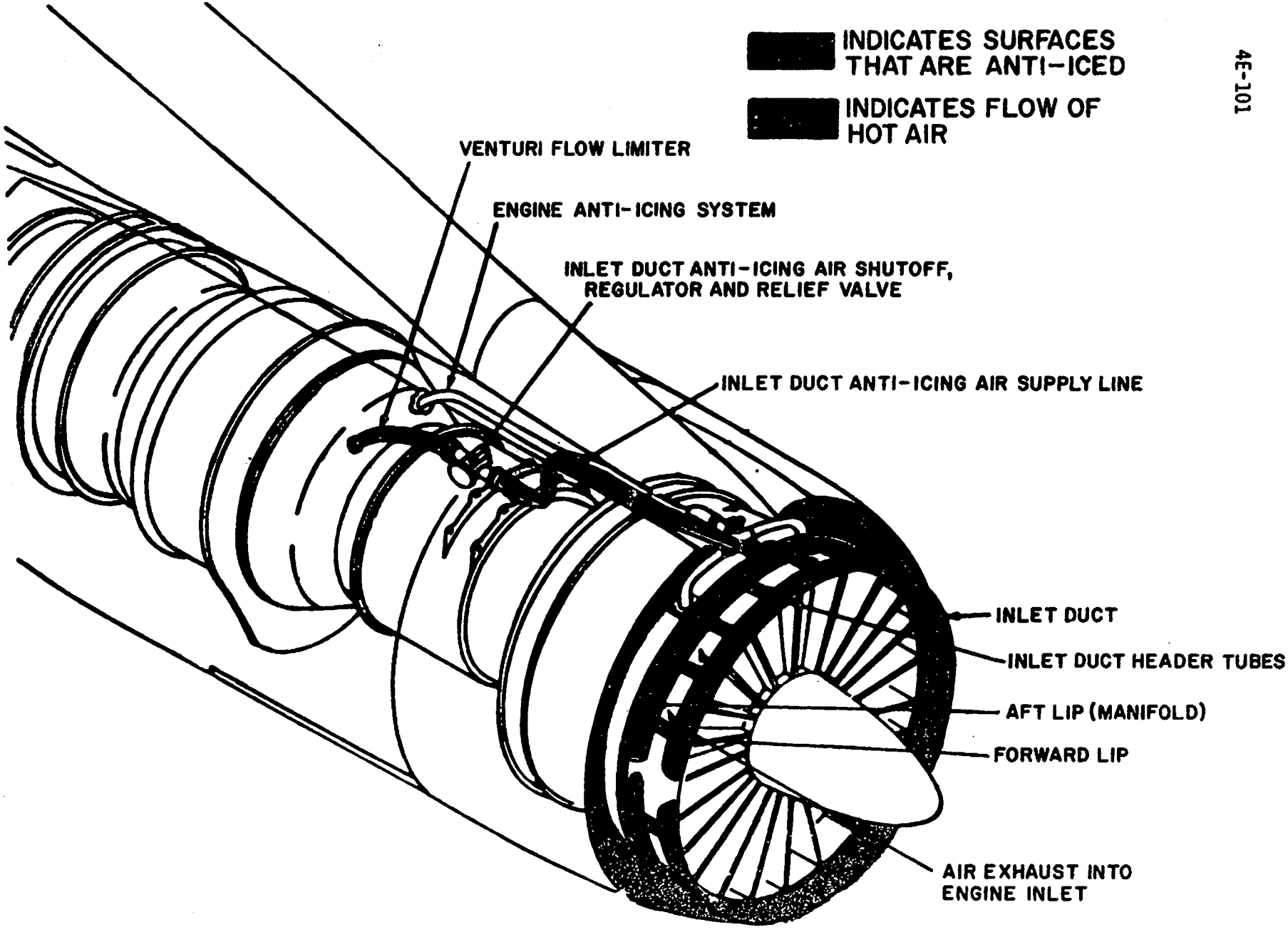

NACELLE ARRANGEM OF THE INLET DUCT ANTI-ICING SYSTEM

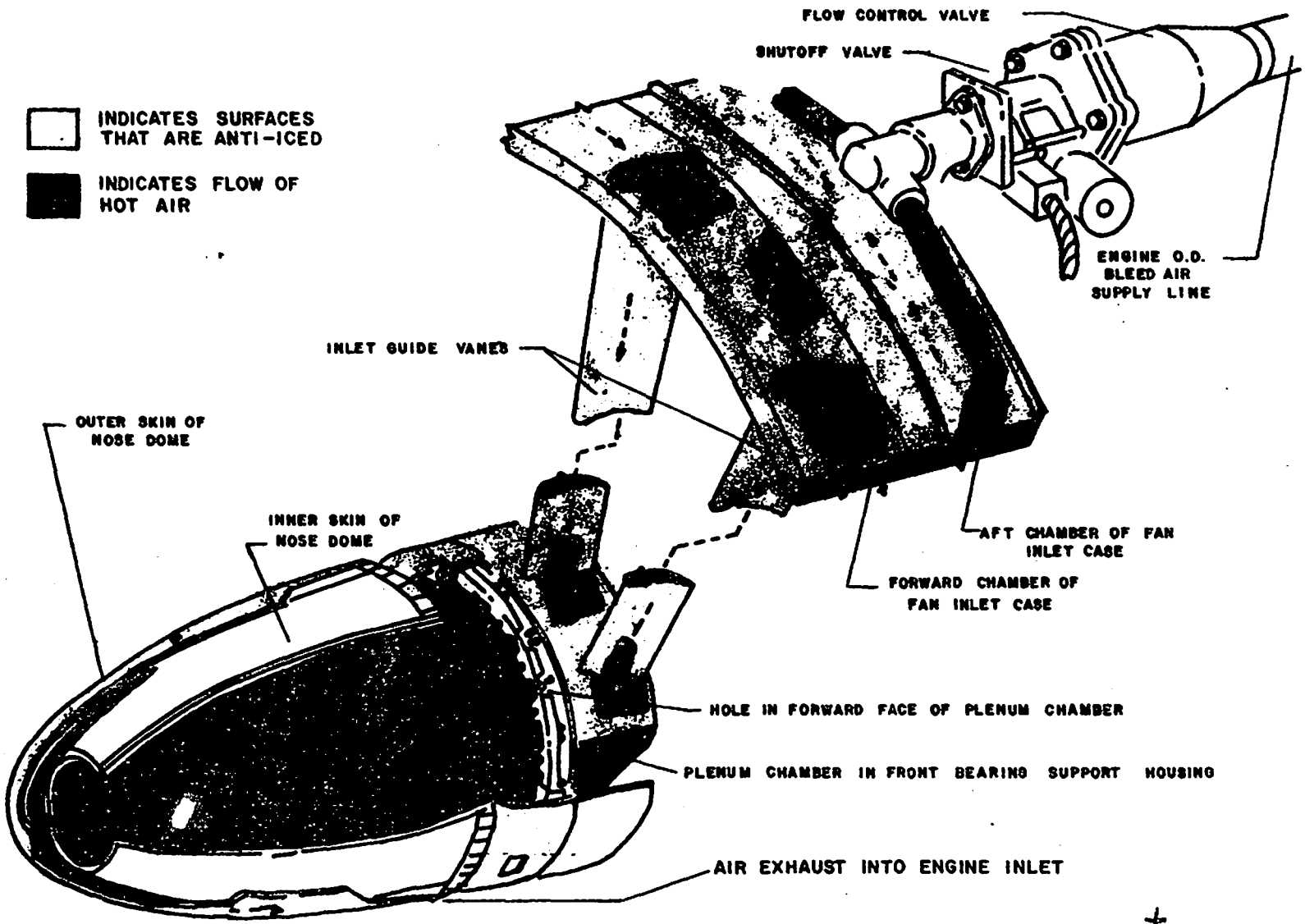

ENGINE ANTI-ICING SYSTEM AIRFLOW

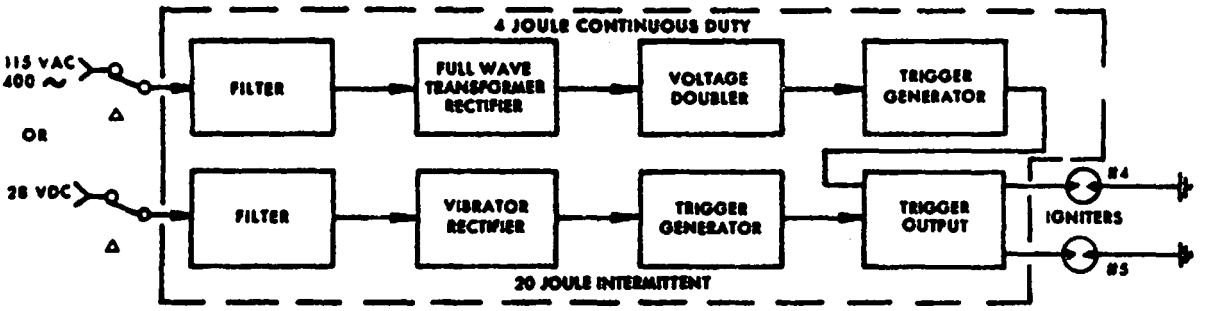

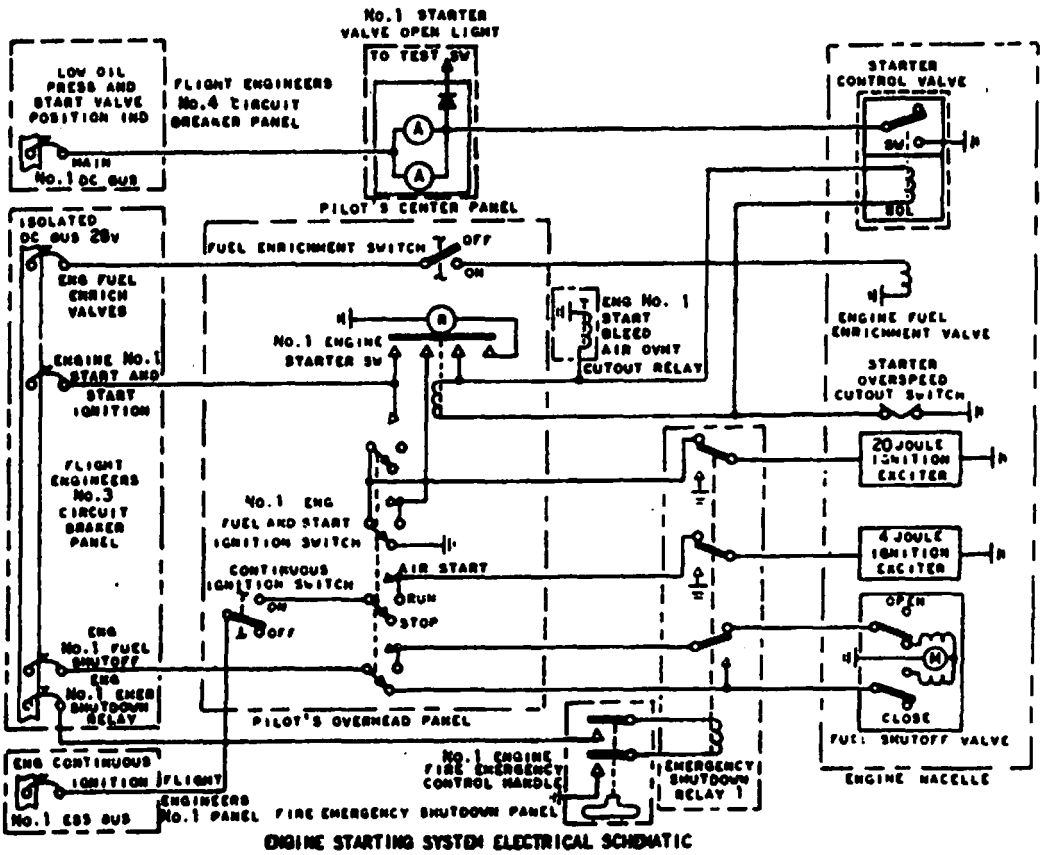

ENGINE STARTING SYSTEM ELECTRICAL SCHEMATIC

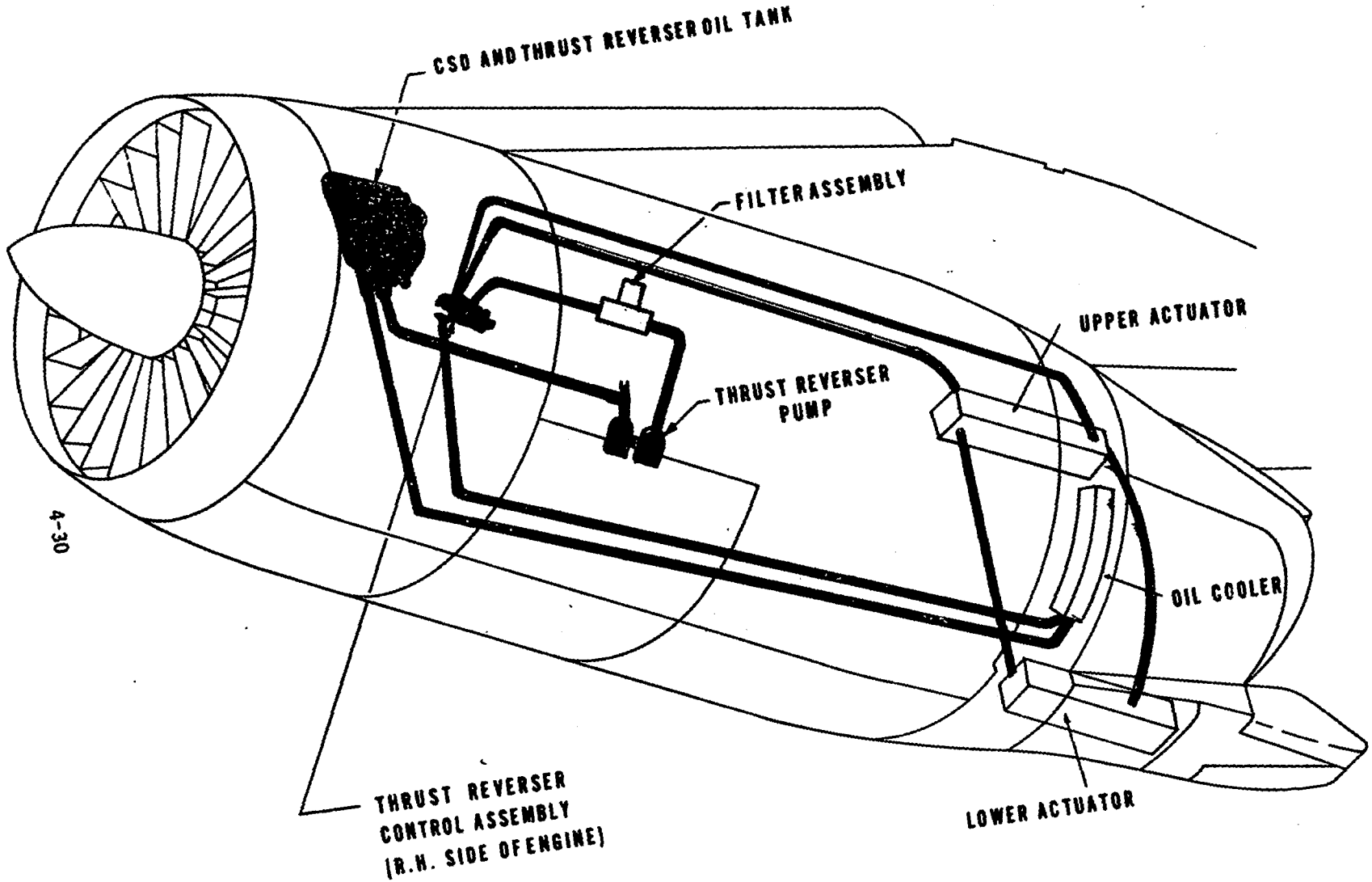
CSD AND THRUST REVERSER OIL TANK
FILTER ASSEMBLY
UPPER ACTUATOR
THRUST REVERSER PUMP
OIL COOLER
LOWER ACTUATOR
THRUST REVERSER CONTROL ASSEMBLY (R.H. SIDE OF ENGINE)

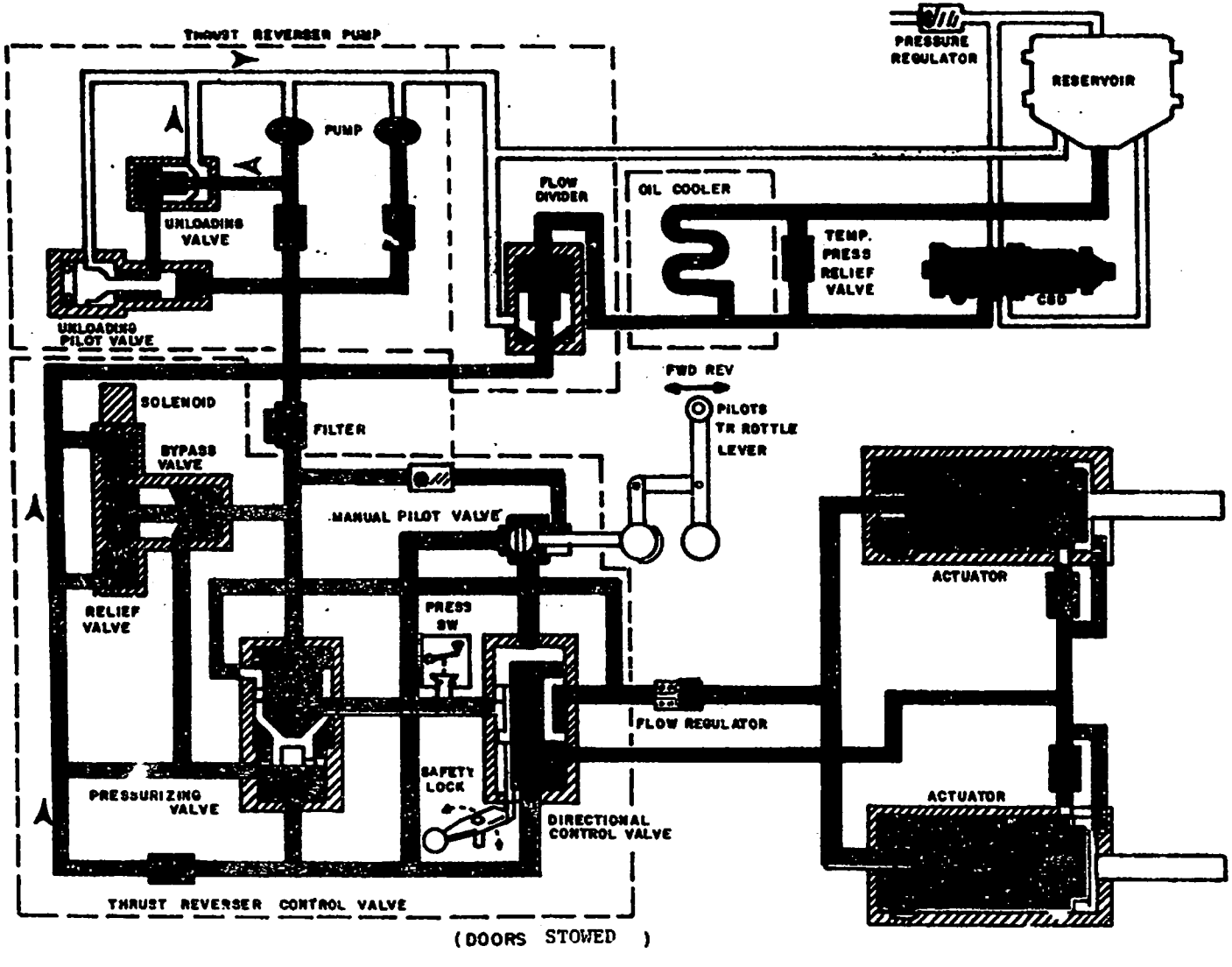

(DOORS STOWED)

THRUST REVERSER ACTUATION SYSTEM

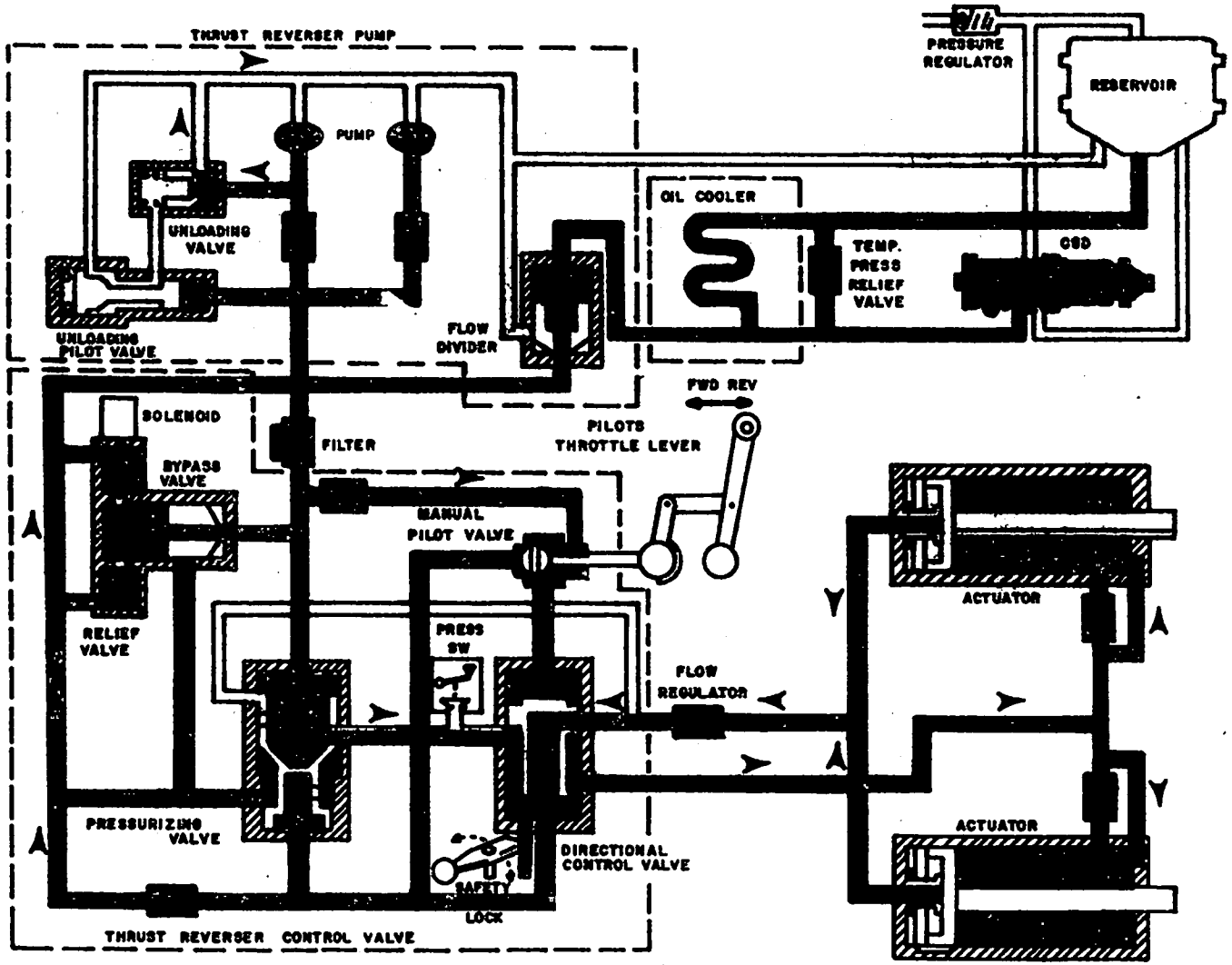

(DOORS EXTENDED)

THRUST REVERSER ACTUATION SYSTEM

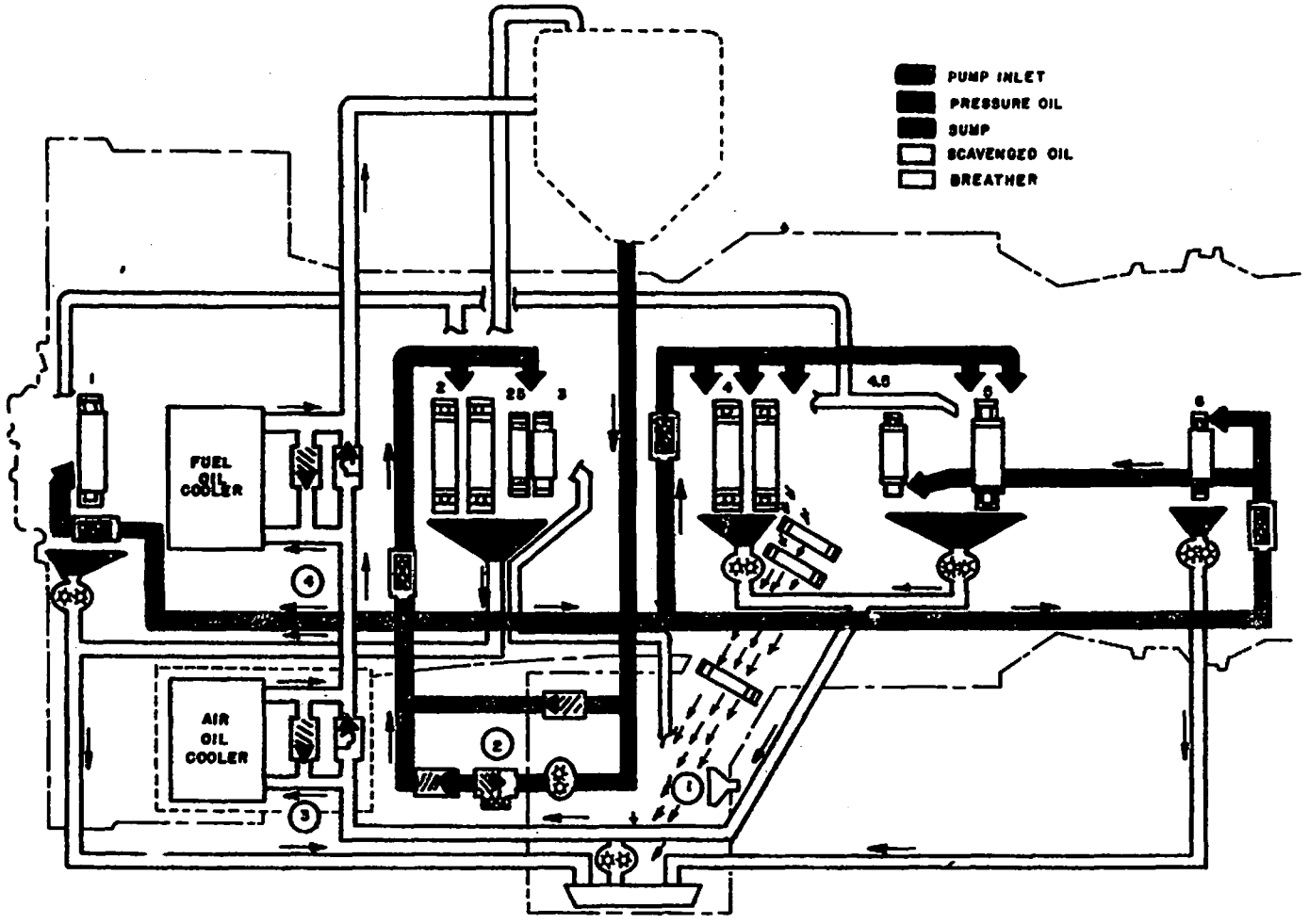

① ROTARY BREATHER

② STATIC CHECK VALVE

ENGINE OIL SYSTEM SCHEMATIC

③ 25 PSID BYPASS AND 77°C TEMPERATURE CONTROL VALVE

④ 40 PSID BYPASS AND 80°C TEMPERATURE CONTROL VALVE

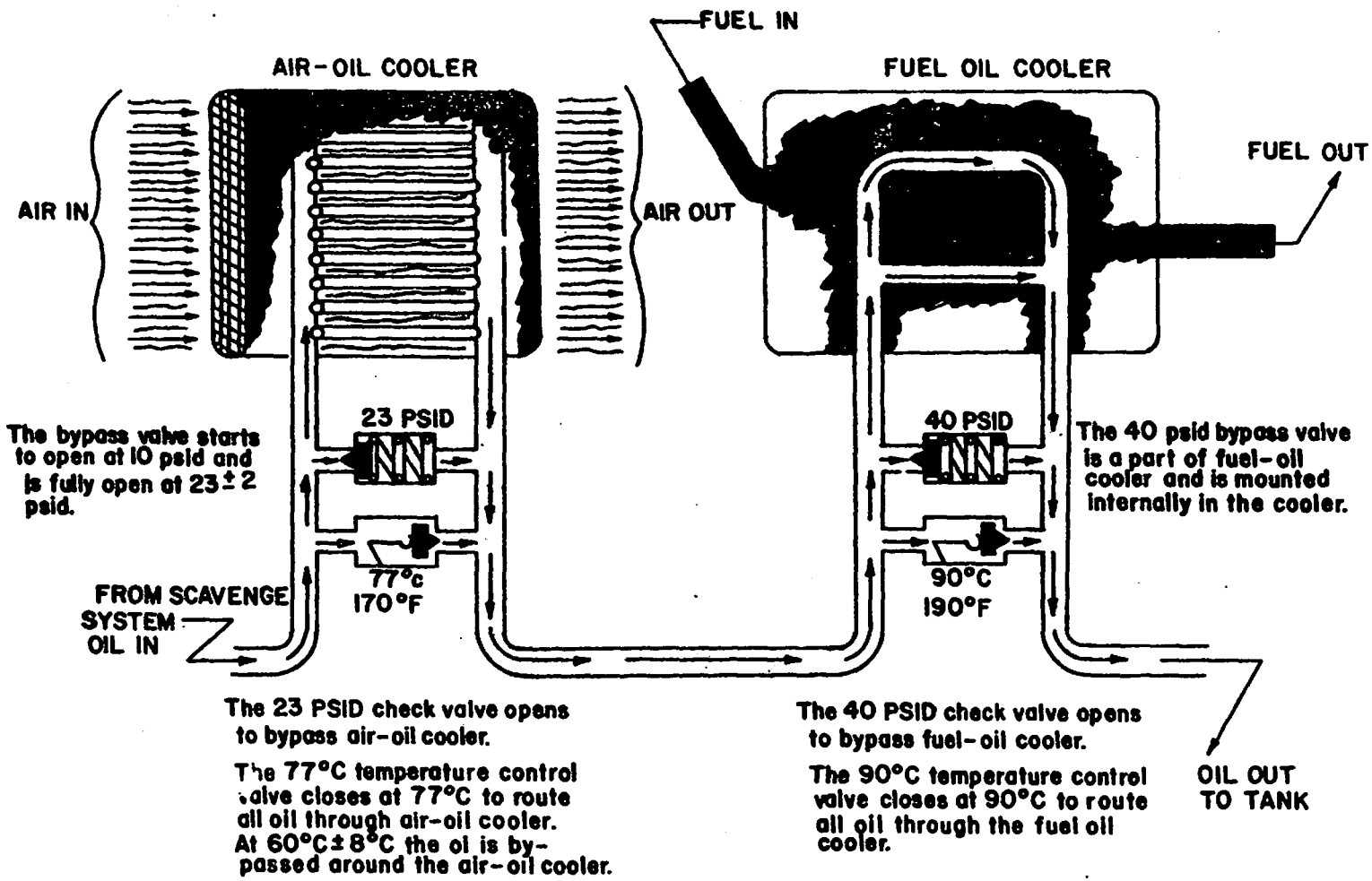

C-141A ENGINE OIL COOLING SYSTEM

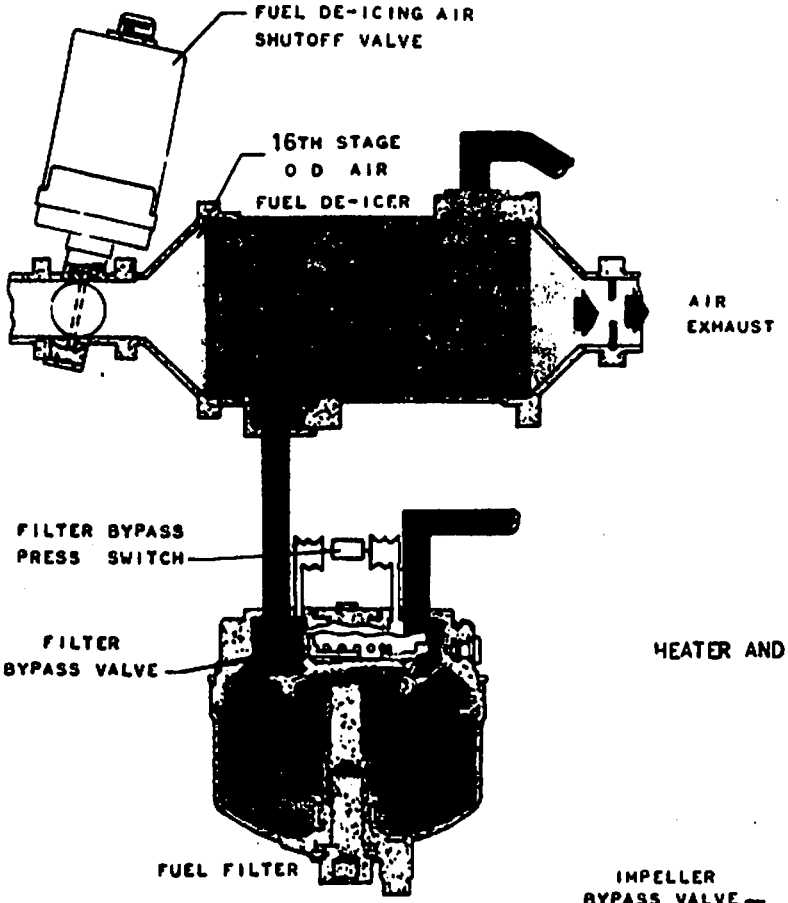

HEATER AND FILTER

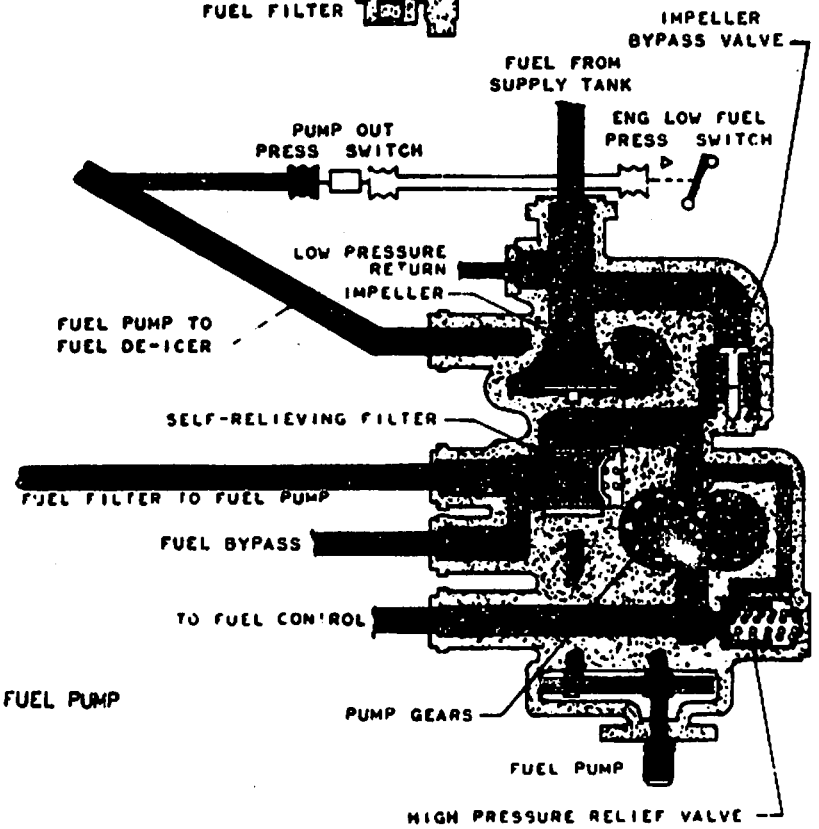

ENGINE FUEL PUMP

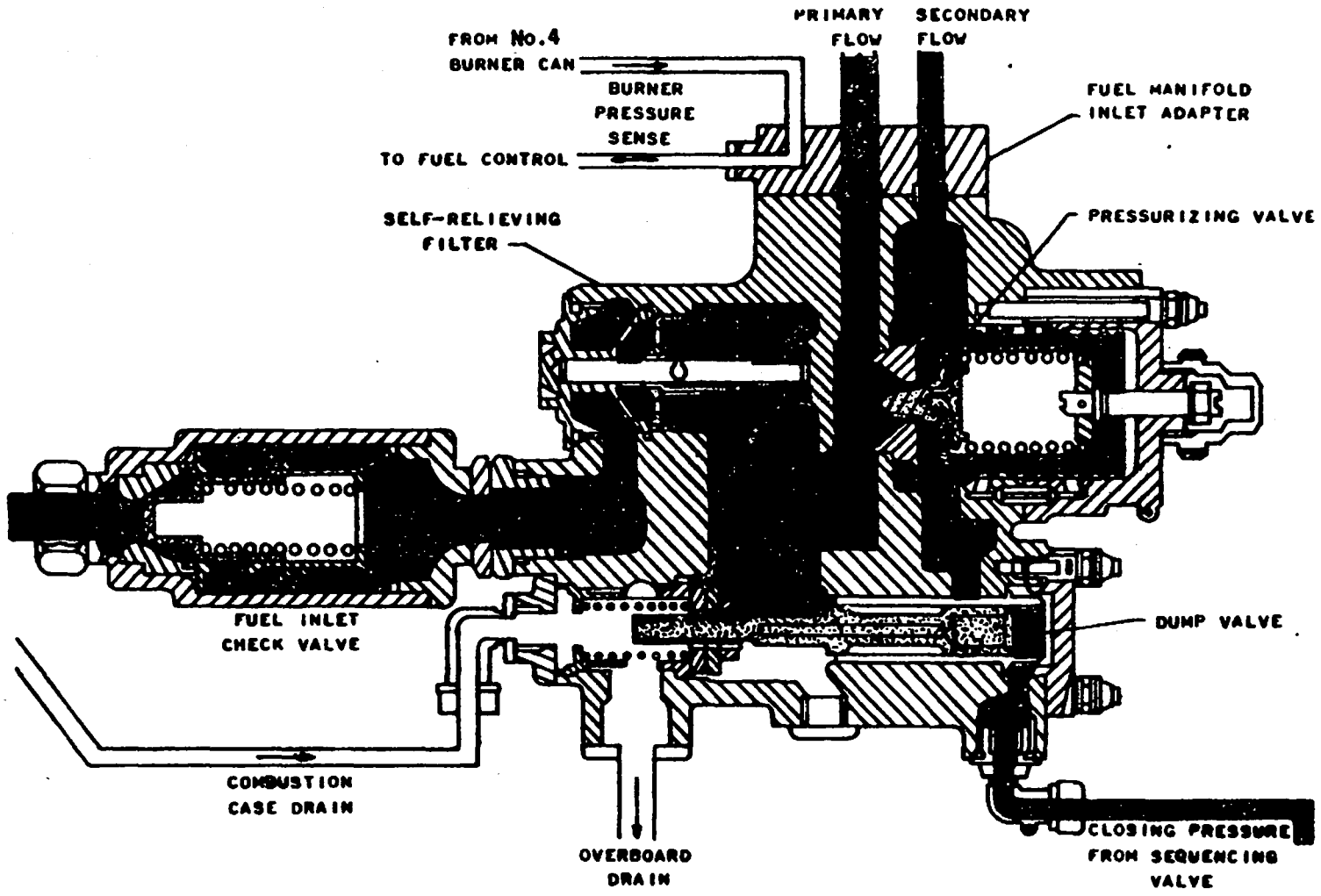

ENGINE FUEL PRESSURIZING AND DUMP VALVE

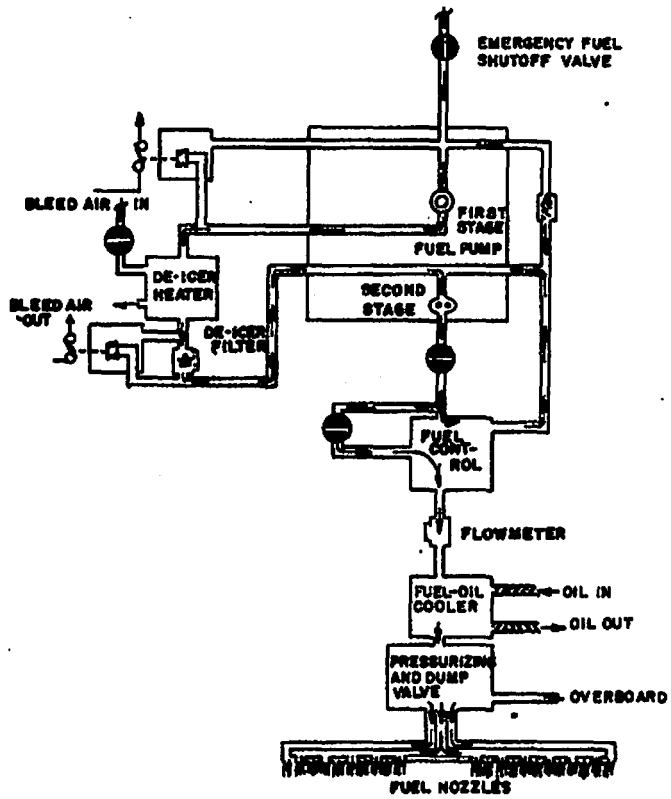

ENGINE FUEL SYSTEM SCHEMATIC DIAGRAM

Section V Environmental Systems

TABLE OF CONTENTS

Chapter 1

BLEED AIR SYSTEM

The environmental system is one of the most diversified systems on the C-141. Yet when divided into its components, it becomes relatively simple to understand. We will study the systems in this order:

1. Bleed Air Manifold
2. Cargo Floor Heat
3. Air Conditioning
4. Pressurization
5. Adverse Weather

Bleed Air Manifold System

The purpose of the bleed air manifold system is to control the flow of bleed air in the environmental and adverse weather subsystems. There are three sources of bleed air: (1) The APU, (2) External ground cart, and (3) 16th stage engine air. The APU or ground cart supplies an airflow of approximately 133 pounds per minute at 40 psi and 210°C for ground operation of the air conditioning system, floor heat system, or engine starting. Approximately 4.6% of the 16th stage ID air is tapped off each engine for use in air conditioning, pressurization, floor heat, windshield rain removel, and wing anti-icing.

Bleed Air Manifold System Components

The system consists of a 4-inch stainless steel, cross-wing manifold, twelve check valves, four engine bleed valves, one wing isolation valve, two system shutoff valves, two pressure relief valves, and three pressure transmitters.

The cross-wing manifold is mounted in the leading edge of the wing and extends from outboard of No. 1 engine pylon to outboard of No. 4 engine pylon. It is insulated with a fiber glass blanket and wrapped with a fiber glass and resin cover. To compensate for thermal expansion and wing flexing, the manifold is coupled with butt joints and compensators.

Engine Bleed Valves

One engine bleed valve is located in each engine pylon, for the purpose of isolating the engine from the manifold. It is a 28-volt DC motor-actuated butterfly valve powered by the isolated DC bus. The circuit breakers are located on the flight engineer's No. 3 circuit breaker panel. All four valves close when the air conditioning master switch is in the APU position. With the air conditioning master switch in any position other than APU, they may be opened or closed as selected by the engine bleed air switches located on the engineer's environmental panel. The valves also close whenever the respective fire control handle is "Pulled" or if a Bleed Duct Overheat occurs. Located above each switch is a CLOSED indicator light for each valve.

Wing Isolation Valve

The wing isolation valve is located in the center wing fillet. Its purpose is to isolate the left and right wing. It, too, is a 28-volt DC motor-driven butterfly valve and receives power from the isolated DC bus. The circuit breaker is located on the flight engineer's No. 3 circuit breaker panel. The valve is normally controlled by the wing isolation switch on the environmental control panel. The valve is in the normal position when closed. The normal switch is overridden, and the valve will open when the air conditioning master switch is positioned to "APU" or "ENG START." Should the valve be open during a Bleed Duct Overheat, it will close until the bleed duct overheat system is reset.

If the valve fails to operate electrically, provisions are provided for manual actuation. To manually operate the valve, gain access by removing the exterior fillet panel. Remove the dust cover on the valve and, using a socket, position the valve to the desi.ed setting.

Venturi

A venturi is installed in the APU and ground high-pressure supply duct. This venturi will limit the maximum air loss, in the event of a duct rupture, to about 300 pounds per minute.

Similar flow limiting venturies are also installed in the bleed air ducts immediately upstream of the bleed air system pressure regulator valves. In addition to limiting the air loss in the event of a ruptured duct, they also limit the amount of air that would have to be dumped overboard by the relief valves if a regulator valve fails.

Floor Heat Shutoff Valve

The floor heat shutoff valve is normally controlled by the Floor Heat switch; during certain ground operations this valve is overridden open by the air conditioning master switch in the "APU" and "Eng Start" positions. The floor heat shutoff valve is located in the APU and ground high pressure supply duct where the duct joins the bleed air manifold in the center wing. It is a motor-driven butterfly type shutoff valve and receives power from the flight engineer's number 3 circuit breaker panel. The power requirement for this valve is 28 vdc. With the valve in the "open" position, actuation of the Cargo Floor Ovht system will drive the valve closed.

System Shutoff and Regulating Valves

There are two system shutoff and regulating valves - one for each air conditioning pack. They are located in the center wing fillet and serve two purposes: (1) To isolate their particular air conditioning pack from the bleed manifold; and (2) To regulate bleed air pressure going to the air conditioning packs to a maximum of 70 psi. The system shutoff and regulating valves are solenoid controlled and pneumatically actuated. The left valve receives power from the isolated DC bus and is protected by a circuit breaker on the flight engineer's No. 3 circuit breaker panel. The right valve receives power from the main DC bus No. 2 and its circuit breaker is on the engineer's No. 4 circuit breaker panel. Both valves are closed when the air conditioning master switch is in the ENG START position and are opened or closed individually by the system shutoff switches in all other positions of the air conditioning master switch. Both valves are spring loaded to the closed position. Should an overheat of the primary heat exchanger occur, these valves will automatically close. Emergency pressurization switches, located on the emergency circuit breaker panel, will transfer power for the system shutoff and regulating valves and cause them to open.

System Pressure Relief Valves

The left and right system pressure relief valves are located in the wing fillet adjacent to their respective system shutoff and regulating valves. They are solenoid controlled and pneumatically actuated. They are electrically powered, simultaneously, with the system shutoff and regulating valves and protected by the same circuit breakers. Their purpose is to regulate system pressure to a maximum of 90-115 psi in the event the system shutoff and regulating valves should fail. It does this by dumping excess air overboard through a port on the underside of the wing leading edge section.

Pressure Transmitters

A pressure transmitter is installed on the center wing section and is connected through check valves to the bleed air manifold on both sides of the wing isolation valve. The highest pressure sensed is transmitted to a single manifold bleed pressure gage on the engineer's panel. Another pressure transmitter is located in each inboard wing leading edge section, downstream from the relief valves. The pressures indicated from these transmitters are read on the dual

regulated air pressure gage, at the engineer's panel. Power for these transmitters is 26 vac from the flight engineer's number 2 circuit breaker panel.

Bleed Manifold Overheat Warning

The overheat warning system consists of two identical Inconel loops. One loop is installed parallel to the bleed manifold ducting in the leading edge of the left wing, and along the ducting in the No. 1 and No. 2 engine pylon, and then along the left air conditioning compartment. The second loop protects the right wing, No. 3 and No. 4 engine pylons, and right air conditioning compartment.

The purpose of the overheat warning system is to protect the leading edge of the wing, pylons, and wing fillet from structural damage in the event the bleed air manifold should rupture.

Actuation of the overheat system will occur whenever the temperature in the wing leading edge exceeds 310°F, or when tested by the wing, pylon and air conditioning compartment overheat switches.

It will illuminate the wing OVERHEAT light, annunciator light, and the master CAUTION warning light and close the two bleed air valves on the affected wing and the wing isolation valve if open. A depressed starter button will override the automatic shutdown feature. Circuit protection and power for this system, come from the flight engineer's number 3 circuit breaker panel (isolated AC and DC).

Leading Edge Blowout Doors

There are 40 external and 8 internal blowout doors in the leading edge of the wing to protect the wing leading edge from structural damage due to a ruptured bleed air duct. The external doors open at 4 to 6 psid, depending on the door size.

The pressure differential on the doors reacts through a lever, which shears a safety rivet, allowing the door to open.

The eight internal doors are spring loaded, closed, and will open when the differential pressure reaches 4 psi.

Chapter 2

CARGO FLOOR HEAT SYSTEM

The cargo floor heat system warms the cargo floor by circulating a mixture of bleed air and ambient air underneath the cargo floor. The system consists of an ejector assembly, supply and distribution ducting, a motor-driven shutoff valve, a pneumatic modulating valve, a pneumatic temperature control thermostat, an anticipator, and an overheat warning system.

For ground operation, air may be supplied by the APU, ground source, or by engine bleed air through the bleed air manifold. For flight operation, only engine bleed air is used.

Cargo Floor Heat

Hot air from the bleed air manifold is supplied through the APU and ground high-pressure supply duct to the APU compartment, and then through a floor heat supply duct to an ejector assembly under the center of the cargo floor. The ejector assembly discharges the hot air into fore and aft distribution ducts which extend nearly the entire length of the floor. Jet pump action of the ejector assembly causes ambient underfloor air to be drawn in and mixed with the bleed air. This air mixture discharges through holes alongside of the distribution ducts. Some of the air recirculated by the ejector assembly. The excess air flows up into the cargo compartment through heat registers along the sides of the cargo floor.

Cargo Floor Heat Shutoff Valve

The cargo floor heat shutoff valve is located in the left wing root. Its purpose is to isolate the floor heat system and the APU from the bleed manifold. It may be opened or closed by the floor heat switch, located on the engineer's environmental panel, when the air conditioning master switch is in any position other than APU or ENG START. With the air conditioning master switch in APU or ENG START position, the floor heat valve is open.

Cargo Floor Temperature Modulating Valve

This valve is solenoid controlled and pneumatically operated. The valve is located in the APU compartment and serves two purposes: (1) It serves as a shutoff valve, by isolating the floor heat system from all three air sources. (2) It regulates bleed air flow to the ejectors in response to the pneumatic thermostat. Electrical power is supplied by the main DC Bus No. 1 through a circuit breaker on the flight engineer's No. 4 circuit breaker panel. The valve is CLOSED when the air conditioning master switch is in ENG START. In all other positions, the floor heat Mod valve is controlled by the floor heat switch, located on the engineer's panel.

Pneumatic Temperature Control Thermostat

The temperature control thermostat is located in the distribution duct cavity. Its purpose is to sense recirculating air temperature and send a pneumatic signal to the floor heat Mod valve, causing it to regulate the bleed air flow and maintain a 65°F recirculating air temperature.

Pneumatic Anticipator

The anticipator is installed in the supply duct adjacent to the aft ejector. The purpose of the anticipator is to send pneumatic signals to the floor heat Mod valve in response to rapid temperature fluctuations. It remains nonactive during steady state temperature conditions.

Cargo Floor Overheat Warning

Overheat warning is provided by two separate sensor systems. One sensor system is a continuous Inconel loop sensor, installed along the supply ducting. This system will detect a rupture of the supply ducting. It will actuate the CARGO FLOOR OVERHEAT WARNING light at 310°F. The second sensor is a thermal switch located in the distribution duct adjacent to the forward ejector. This sensor, set at 220°F, will detect overheat temperatures of the ejector caused by a failure of the cargo floor temperature modulating valve. Should either sensor actuate the overheat system, the Floor Heat Shutoff Valve and Floor Heat Modulating Valve will close and the FLOOR HEAT OVERHEAT light on the engineer's panel will illuminate. A depressed starter button will override the automatic shutdown feature.

Chapter 3

AIR CONDITIONING SYSTEMS

The air used for air conditioning is supplied by the bleed air manifold, regulated to a maximum pressure of 70 psi by the system shutoff and regulator valves. It is routed through two air conditioning packs, to the flight station and cargo compartments. Air flow from the left air conditioning pack normally supplies 38% of its flow to the flight station and the remainder to the cargo compartment. Airflow from the right pack is normally routed to the cargo compartment.

Air conditioning is accomplished by cooling bleed manifold air to 230°C through a primary heat exchanger, then to 65°C through a secondary heat exchanger, and routing a portion of it through a turbine refrigeration unit which super cools the air. The super cooled air then mixes it with an appropriate amount of 230°C air to obtain the desired cabin temperature.

The two identical air conditioning packs are located in the center wing section and are made up of the following subunits: Primary heat exchanger, secondary heat exchanger, refrigeration unit, distribution ducting, temperature control system, and flow control and shutoff valve.

Primary Heat Exchanger

The purpose of the primary heat exchanger is to provide the initial cooling of the bleed air manifold air temperature. The components making up the primary heat exchanger are the heat exchanger core, cooling air control valve, ejector shutoff valve, and temperature control system.

Heat Exchanger Core

The heat exchanger core is a single-pass air radiator mounted in the wing leading edge scoop. The bleed air passing through the unit is cooled by a controlled flow of ram air passing over the radiator.

Cooling Air Control Valves

The cooling air control valves are motor driven, butterfly valves, located in the ram air duct, downsteam of the primary heat exchangers. The right cooling air control valve receives power from the essential AC bus No. 2. The circuit breaker is located on the flight engineer's No. 2 circuit breaker panel. Electric power for the left valve is supplied by the isolated AC bus. The circuit breaker is located on the flight engineer's No. 3 circuit breaker panel. The purpose of the cooling air control valves is to control ram airflow over the primary heat exchangers. The valves are automatically controlled by the temperature control system.

Ejector Shutoff Valves

The purpose of the ejector shutoff valves is to induce a cooling airflow over the primary heat exchangers during ground operation and at air speeds below .3 Mach. They are 28-volt, DC motor-driven, butterfly valves and are normally controlled by the CADC system during inflight and ground operation. The air conditioning master switch, when in the APU position, will override the CADC and close the ejector valves. Two EJECTOR ON lights on the environmental control panel indicate the position of the ejector valves.

Temperature Control System (Primary Heat Exchanger)

The purpose of the temperature control system is to provide a modulated AC control signal to position the cooling air control valve for an appropriate cooling air flow. The system consists of a temperature control box, temperature sensor (230°C), and a combination anticipator and high light sensor. The sensors are located in the ducting downstream of the heat exchanger. The 230°C sensor provides the normal operating signal to the temperature control box for the positioning of the cooling air valve. The anticipator portion of the anticipator and high light sensor detects rapid temperature changes but is nonoperative during normal operation. Should the temperature reach 280°C, the high limit portion will open the cooling air control valve and close the system regulating and shutoff valve.

Flow Control and Shutoff Valve

The flow control valve is an airflow regulator with a shutoff feature. Although its main purpose is to provide a constant flow of air through the air conditioning system, it also serves as the air conditioning system shutoff valve. The valve is an automatic modulating butterfly which regulates the airflow at 100 pound per minute (ppm). It is solenoid-controlled, pneumatically actuated, spring-loaded closed, and de-energized open. Both flow control valves are normally controlled by the Air Cond Master switch and are normally open during flight. Either valve, however, can be overridden closed by a turbine overheat condition. A thermal switch at the inlet of each cooling turbine automatically closes its respective flow control valve if the inlet temperature exceeds 100°C. Both valves are overridden closed by the Emer Depress switches. Power requirements are 28 volts which are received from the flight engineer's No. 4 circuit breaker panel.

Refrigeration System

There are two identical refrigeration systems located in the center wing section. Each system consists of a secondary heat exchanger, cooling turbine, turbine inlet, temperature sensor, turbine bypass valve, water separator, low limit temperature control sensor, temperature control valve, and compartment temperature control system.

Secondary Heat Exchangers

The secondary heat exchangers are located adjacent to the primary heat exchangers and receive cooling air from the same wing air scoop. The secondary heat exchangers differ from the primary heat exchangers in that the bleed air makes two passes in a cross-counter flow pattern. Their purpose is to further lower the bleed air temperature to approximately 65°C for use in the cooling turbines.

Cooling Turbines

The cooling turbines are radial flow design and are located downstream of the secondary heat exhangers. They operate by bleed air from the secondary heat exchanger. The work expended in turning the turbine causes a rapid expansion of the air and a large drop in temperature. The cold air is then routed through a water separator to a mixing chamber in the ducting. The turbine also drives a fan fastened to the opposite end of the same shaft. On the ground the fan induces an airflow over the secondary heat exchanger in reducing bleed air temperature. In flight the fan serves as an air preload on the turbine to prevent turbine overspeed.

Turbine Inlet Temperature Sensor

This sensor is a thermal switch in the bleed air duct between the secondary heat exchanger and the turbine inlet. Its purpose is to protect the turbine from excessive bleed air temperatures. If for any reason the turbine inlet temperature exceeds 100°C, the thermo switch will close the flow control and shutoff valve, thus shutting off bleed air to the refrigeraton system. When the temperature drops to normal, the valve will open to resume normal operation.

Water Separator

As air flows through the turbine, the rapid expansion and cooling effect causes the water vapor in the air to condense and become "free" moisture (fog). To remove some of this moisture and provide humidity control, a cyclonic-type water separator is installed. About 55 percent of the free moisture is removed by the separator. As the moisture-laden air flows through the separator, the unit extracts the water and discharges it overboard through a drain opening in the side of the fuselage. A relief valve in the unit will offset at approximately 8 psid to prevent a pressure build-up if the blanket becomes clogged.

Low Limit Temperature Sensor and Turbine Bypass Valve

The purpose of the low limit temperature sensor and turbine bypass valve is to prevent the turbine air temperature from dropping below 2°C at the water separator outlet. It is located in the ducting immediately downstream of the water separator. Should the air temperature at this point drop below 2°C, the sensor will send a signal to the turbine bypass valve, causing it to allow some of the secondary heat exchanger bleed air to bypass the turbine and mix with the cold turbine air prior to entering the water separator.

Temperature Control Valve

The purpose of the temperature control valve is to bypass 230°C temperature air from the primary heat exchanger around the refrigeration unit, to be mixed with the refrigerated air downstream from the water separator. The temperature control valve is a DC motor-driven butterfly valve, actuated by a signal from the compartment temperature control system.

Compartment Temperature Control System

Flight station and cargo compartment temperatures are controlled by similar but separate control systems. The components of each system are the same except for their internal calibration to accommodate the temperature of each compartment.

Compartment temperatures may be controlled manually or automatically by the temperature control switches and temperature selectors on the engineer's environmental panel. The flight station temperature control switches control the left air conditioning pack, and the cargo compartment temperature control switch controls the right air conditioning pack.

The temperature control switch is a four-position toggle switch. The four positions are AUTO, HOLD, COOL, and HOT. The switch is spring loaded from the COOL or HOT position to the HOLD position. With the switch held in the COOL position, it runs the temperature control valve toward the closed position. In the HOT position, it runs the temperature control valve toward the OPEN position. In HOLD, the valve remains in the previously assumed position.

During manual operation, duct temperature is limited by a high-limit temperature sensor switch located in the distribution ducting. The sensor will automatically reset when the temperature drops.

When the temperature control switch is in the AUTO position, compartment temperature is controlled by positioning the temperature selector to the desired setting. The temperature selector is a potentiometer having a range of 40°F to 110°F, and makes up one leg of a bridge circuit. The compartment temperature sensor and a duct anticipator and high limit sensor make up the other two legs.

The cargo compartment temperature sensor is located in the aft cargo compartment near the cabin pressurization outflow valves. The flight station temperature sensor is located above the flight engineer's panel. Both sensors are thermistors and have a small fan which circulates compartment air over them in order to give a more accurate temperature indication. A temperature bulb in the cargo compartment and a temperature gage on the environmental panel indicate cargo compartment temperature. There is no temperature indicator for the flight station.

Distribution Ducting

There are two ducting systems for the flight station and one ducting system for the cargo compartment. The flight station has "gasper" air outlets and normal flight station outlets.

Gasper air comes directly from the left air conditioning pack downstream from the cooling turbine but prior to the temperature control valve duct junction. This supplies air to the gasper outlets. A gasper outlet, which can be opened or closed manually, is located at each crew position.

Airflow to the normal flight station or cargo compartment outlets may be either refrigerated or warm air.

Flight Station Diverter Valve

The diverter valve is located in the left air conditioning pack distribution ducting. It is controlled by the flight station air flow switch, located on the environmental panel. The switch is a rotary switch with four positions: MIN, NORM, INCR, and MAX. With the switch in NORM, 38% of the left pack airflow is directed to the flight station. The INCR position directs 68% to the flight station; MAX, 100% to the flight station; and the MIN position shuts off the airflow to the flight station and directs all the air from the left pack to the cargo compartment, with the exception of gasper air. In all positions other than MIN, the air not going to the flight station is directed to the cargo compartment. Circuit protection and power come from the flight engineer's No. 3 circuit breaker panel.

Alternate Air Shutoff Valve

The alternate air shutoff valve is located in the right air conditioning pack distribution ducting and normally directs all the airflow from the right pack to the cargo compartment. In the event the left air conditioning pack should become inoperative, 38% of the right pack air may be directed to the flight station through the alternate air shutoff valve, by positioning the air conditioning master switch to RIGHT. Circuit protection and power come from the flight engineer's No. 4 circuit breaker panel.

Ram Air Ventilating System

During nonpressurized flight, ram air may be used to ventilate the aircraft. The ram air intake is located in the right wing air scoop, adjacent to the right primary heat exchanger. The ram air ducting connects to the left air conditioning distribution ducting, just upstream from the diverter valve. This allows the airflow to be directed to the flight station and the cargo compartment, as desired, by positioning the diverter valve. The airflow will also back-flow through the distribution ducting to the gasper outlets.

Chapter 4

PRESSURIZATION SYSTEM

The flight station, cargo compartment, and underdeck area are pressurized.

Pressurization is maintained by controlling the outflow of surplus air from the cabin. A maximum pressure differential of 8.3 psid is maintained by the automatic controller. This will maintain a sea-level cabin altitude up to an aircraft altitude of 21,000 feet, or an 8,000 cabin altitude up to an aircraft altitude of 41,000 feet.

The pressurization system consists of:

Two outflow safety valves	A manual controller
Automatic controller	Control venturi
Two solenoid shutoff valves	Jet pump regulator valve
A control fan and venturi	Two negative pressure relief valves
A manual and electrical depressurization system	
Cabin pressurization instruments	Two indicator lights

Outflow Safety Valves

The two outflow safety valves are located on the aft pressure bulkhead. Their purpose is to regulate the amount of cabin air outflow. The valve assembly consists of a pneumatic relay, differential control, air jet pump, a cabin limit control, cabin limit override, and negative pressure control.

In response to a pneumatic signal from the automatic or manual controller, the pneumatic relay controls the normal positioning of the outflow valve. The differential control prevents the cabin from exceeding a maximum differential pressure of 8.3 psid normally. A maximum differential pressure of 8.6 psid can be maintained with one valve inoperative. The air jet pump provides a reduced pressure to assist in positioning the outflow valve. The cabin limit control automatically limits cabin altitude to a maximum of 13,000 ± 1,500 feet, but may be overridden by the cabin altitude limit override switch.

Negative Pressure Relief Valves

The fuselage is built to withstand high inside pressure pushing out - not high outside pressure pushing in. Since it is possible to obtain a negative differential pressure under certain conditions, two separate valves are installed to limit this differential to a maximum of 0.4 psid.

Manual Controller

The manual controller, located on the flight engineer's panel, provides a manual

means of sending a pneumatic increase or decrease signal to the pneumatic relay. The control knob has three positions: DECREASE PRESS, AUTO, and INCREASE PRESS.

Automatic Controller

The automatic controller is located on the flight engineer's panel adjacent to the manual controller. It provides a means of selecting cabin altitude from -1,000 feet to 10,000 feet and controlling the rate of cabin altitude change from 200 to 2,000 FPM. The automatic controller also contains a differential pressure control set at 8.3 psid.

Cabin Pressure Control Venturi

A venturi is used to supply the negative pressure necessary for controlling the pneumatic relays of the outflow valves. It is located behind the flight engineer's station and is attached to the aircraft skin. With the air conditioning systems operating, cabin air flows overboard through the venturi. This airflow creates a slight negative pressure at the throat. The negative pressure is supplied to both pressure controllers and to the low-pressure dump solenoid.

Jet Pump Regulator Valve

The high pressure air, used by the jet pumps and cabin altitude limit control override diaphragms in the outflow valves, is supplied from the bleed air manifold. A pressure regulator is installed in the supply line to provide a source of constant pressure for the jet and pumps, and to protect the altitude limit override diaphragms. The regulator is located on the aft right-hand side of the rear wing box in the cargo compartment. It regulates at 15 psid above cabin pressure and includes a 26 psid relief valve.

Solenoid Shutoff Valves

A cabin altitude limit override solenoid is located on the aft pressure bulkhead. When energized by the cabin limit override switch on the flight engineer's panel, it allows bleed air pressure from the jet pump regulator valve to enter the cabin limit override chamber of each outflow valve, and close off the cabin air passage into the head chamber. This will allow the cabin altitude to climb above 13,000 ± 1500 feet.

The emergency depressurization solenoid is located behind the flight engineer's panel. When energized by either the pilot's or flight engineer's emergency depressurization switch, it evacuates the control chamber of the automatic and manual controllers overboard through the control venturi, causing the outflow valves to open and depressurize the aircraft. The cabin altitude limit override solenoid is also energized by the emergency depressurization switches.

Control Fan and Venturi

The control fan and venturi assembly is located on the aft pressure bulkhead,

adjacent to the right outflow valve. Its purpose is to prevent accidental pressurization on the ground. The control fan is actuated by a touchdown relay and pulls cabin air through the venturi, creating a vacuum sufficient to hold both outflow valves open. Also, if the Air Cond Master switch is positioned to ENG START, OFF, or RAM, both low-limit relays are de-energized, which applies power to the fan, causing both outflow valves to open.

Emergency Depressurization

Emergency depressurization may be accomplished electrically by the emergency depressurization switch or manually by the emergency depressurization "T" handle located on the pilot's overhead panel. The emergency depressurization "T" handle opens the depressurization hatch located overhead and just aft of the crew entrance door. Emergency depressurization may be accomplished in 90 seconds electrically and in 15 seconds manually. The emergency depressurization switches will also shut down both air conditioning packs and the floor heat system.

Instruments

Two gages are located on the flight engineer's panel - a cabin rate of climb and a cabin altitude and differential pressure gage. The first indicates cabin rate of climb or descent from 0 to 6,000 fpm. The second is a dual indicator. The outer scale indicates differential pressure and the inside scale reads cabin altitude. An identical cabin altitude and differential pressure gage is located on the copilot's panel.

Cabin Altitude Warning Lights

Two cabin altitude warning lights illuminate when the cabin altitude exceeds 10,000 ±1000 feet. One light is located directly below the cabin altitude and differential pressure gage, at the flight engineer's panel, and the other is on the annunciator panel. The annunciator panel light reads CABIN PRESS LOW. Both lights are activated by a pressure switch located in the right-hand under deck area, near the electrical cooling fans. Power for this system comes from the Isolated D.C. bus.

Chapter 5

ADVERSE WEATHER SYSTEMS

Wing Anti-Ice System

The wing anti-ice system uses a mixture of bleed air and ambient air to heat the leading edge of the wing. The sections of the leading edge which are anti-iced are the "mid," "inner-outboard," and "outboard." The mid section is between the engine pylons; the inner-outboard is a section immediately outboard of the No. 1 and No. 4 pylons; the outboard section extends from the inner-outboard section to the wing tip.

Air from the bleed air manifold is routed through a wing anti-ice "mod" valve to the "piccolo" tube, where it is injected into a small transfer chamber between the double skin area, inside the leading edge of the wing. As the bleed air is injected into the transfer chamber, it induces leading edge ambient air to mix with the bleed air, then flows through the double skin transfer passages to heat the wing leading edge. Ambient air is drawn into the leading edge through quarter-sized ports in the lower portion of the leading edge. The air is exhausted overboard at the louvers in the wing tip for the outboard section and at slots in the upper trailing edge of the pylons for the inner-outboard and mid-sections.

Wing Anti-Ice "Mod" Valves

Three wing anti-ice "modulating" valves are in each wing, one for each section. The purpose of the "mod" valves is to regulate the temperature and volume of air flowing to the piccolo tubes. The valves are solenoid controlled and pneumatically actuated. The "mod" valves receive power from the main DC buses. The circuit breakers are all located on the flight engineer's No. 4 circuit breaker panel.

Three (ON-OFF) wing anti-ice switches are on the pilots' overhead panel, marked: OUT-BOARD, INNER-OUTBD, and MID. Each switch will control the corresponding section on both wings simultaneously. Four indicator lights are over each switch to indicate the left and right ON, and left and right OVERHEAT. The "mod" valves are actuated by a signal from penumatic thermostats in the leading edge of the wing. The thermostats for the outboard, inner-outboard, and mid "mod" valves are set at different temperatures to compensate for the wing area they heat and to conserve the heated air.

Located near each pneumatic thermostat is an overheat sensor. Should the temperature reach 105°C in the outboard and inneroutboard, or 90°C in the mid, the wing overheat, annunciator, and master CAUTION warning lights will come ON. The system will not shut down automatically.

Empennage De-icing

Empennage de-icing is provided by electrical heating elements embedded in the fiberglass leading edge sections of the horizontal stabilizer. No provision is made for de-icing the vertical stabilizer.

Change 1 - 2 Mar 81
Change 2 - 18 May 81

The leading edge of the horizontal stabilizer is divided into eight sections. Each section has two shedding area heaters and three parting strips, for a total of 16 shedding area heaters and 24 parting strip heaters. De-icing is accomplished by intermittently applying power to the shedding area heaters, individually, in sequence, and continuously applying power to the parting strip heaters. The deicing cycle always begins with the far left shedding area, which is number one, then alternates to the opposite far right side, which is number two, gradually working into the center, to provide symetric de-icing.

The principal components of the system include the leading edge heaters, an automatic controller (located in the vertical stabilizer) and a three-position ON - OFF - TEST control switch.

Placing the switch in the ON position energizes the controller, which automatically monitors the system. The controller closes the circuit to the continuously heated parting strips and switches power in sequence to each of the 16 shedding areas. The length of the heating time for each shedding area is determined by a skin temperature sensor or by a maximum heating time built into the controller. The controller will allow a maximum time of 15 seconds in each shedding area. In high temperature icing conditions, the skin temperature sensor causes the controller to switch power to the next shedding area when skin temperature reaches 32°C.

If an entire de-icing cycle is completed in less than 3 minutes, a built-in delay prevents the next cycle from starting until the 3-minute interval has elapsed. If the controller fails during normal operation, power to the shedding areas and the parting strips is disconnected, and the SYS OFF light on the overhead panel illuminates. Any shorted or open shedding area heater causes the ELEM FAULT light on the overhead panel to illuminate, when the controller connects power to that element. In case of a parting strip overheat, power to all parting strips will be disconnected, and the STRIP OFF light on the overhead panel will illuminate.

Operation of the system may be checked on the ground by placing the control switch in the TEST position. The controller will operate through a cycle, but a switch controlled by the landing gear prevents application of power to the heater elements. During ground test, the STRIP OFF light should illuminate. The SYS OFF light should cycle ON and OFF, and the ELEM FAULT light should remain OFF.

Windshield Anti-Icing

The windshield anti-icing system consists of seven electrically heated windshields. There are three front windshields and two side-panel windshields on each side. The heat used is commonly referred to as NESA heat.

The windshield anti-icing system consists of three separate systems, individually controlled by windshield heat control switches on the pilot's overhead panel, marked pilot's, center and copilot's. The system is further divided into windshield heat and side panel defogging. The pilot's and copilot's side panel defogging systems are controlled by the respective windshield heat switches.

If severe icing conditions are encountered, the switches can be placed to HIGH, which will increase the amount of voltage to the windshields. The HIGH position is intended to be used only in flight when the NORMAL position will not provide enough heat.

The voltage to the side panel windows will not increase with a change in switch postion. Opening a clear vision windshield will cut power to both windshields on that side.

The cold start switches, on the overhead panel, provide manual heat control to the front windshields when the temperature is below -43°C. The manual cycling should be 5 seconds ON and 10 seconds OFF until the windshield temperature reaches -43°C, when automatic operation will commence. The windshield heat control switches should be placed in NORMAL, when using the cold start switches. The side windshield heat will start at temperatures as low as -54°C.

The pilot's and copilot's windshield heat is wired through the rain removal switch. Whenever the rain removal system is being used, the respective windshield heat is disconnected.

Windshield Rain Removal

The pilot's and copilot's windshields are cleared by a continuous blast of high temperature, high velocity air, discharged through nozzles at the base of the windshields. Air is normally supplied by both air conditioning packs but will function satisfactorily from either pack. Whenever the windshield rain removal system is used, it will automatically turn the NESA heat system off for the affected windshield.

The bleed air used in the windshield rain removal system is tapped from the downstream side of each primary heat exchanger. The system consists of a pilot's and copilot's rain removal shutoff valve, left and right pressure regulator shutoff valves, venturis, check valves, and discharge nozzles. The rotary control switch and overheat lights circuit breakers are located on the flight engineer's No. 3 circuit breaker panel (Isolated DC Bus).

Rain Removal Shutoff Valves

There are two rain removal shutoff valves, one for the pilot's windshield and one for the copilot's. They are motor-driven butterfly valves and are controlled by the rotary rain removal switch marked OFF - PILOT - BOTH - COPILOT. Power and circuit protection come from the flight engineer's No. 3 circuit breaker panel.

Pressure Regulator Shutoff Valves

There are two pressure regulator shutoff valves, one controlling airflow from the left primary heat exchanger, and one controlling airflow from the right heat exchanger. They are solenoid controlled and pneumatically actuated. They serve a dual function as a system shutoff valve and pressure regulator. Both valves are armed electrically when the rain removal switch is in any position other than OFF and are opened pneumatically by airflow from their respective primary heat exchanger. These valves regulate pressure to approximately 15 psig for use in the rain removal system. Circuit protection and power for the left valve is Isolated DC and for the right valve, Main DC.

Check Valves

Check valves are located downstream of each venturi. Their purpose is to prevent a backflow of pressure from one air conditioning pack to the other when operating on only one air conditioning pack.

Rain Removal Overheat Warning

Overheat sensors are embedded in the vinyl layer of the pilot's and copilot's windshield's lower center. Should either windshield temperature reach 71°C, the RAIN REMOVAL OVHT light on the annunciator panel and the appropriate rain removal OVHT light on the pilots' overheat panel will come ON. The lights will go OUT when the temperature drops to 64°C. The system will not shut down automatically.

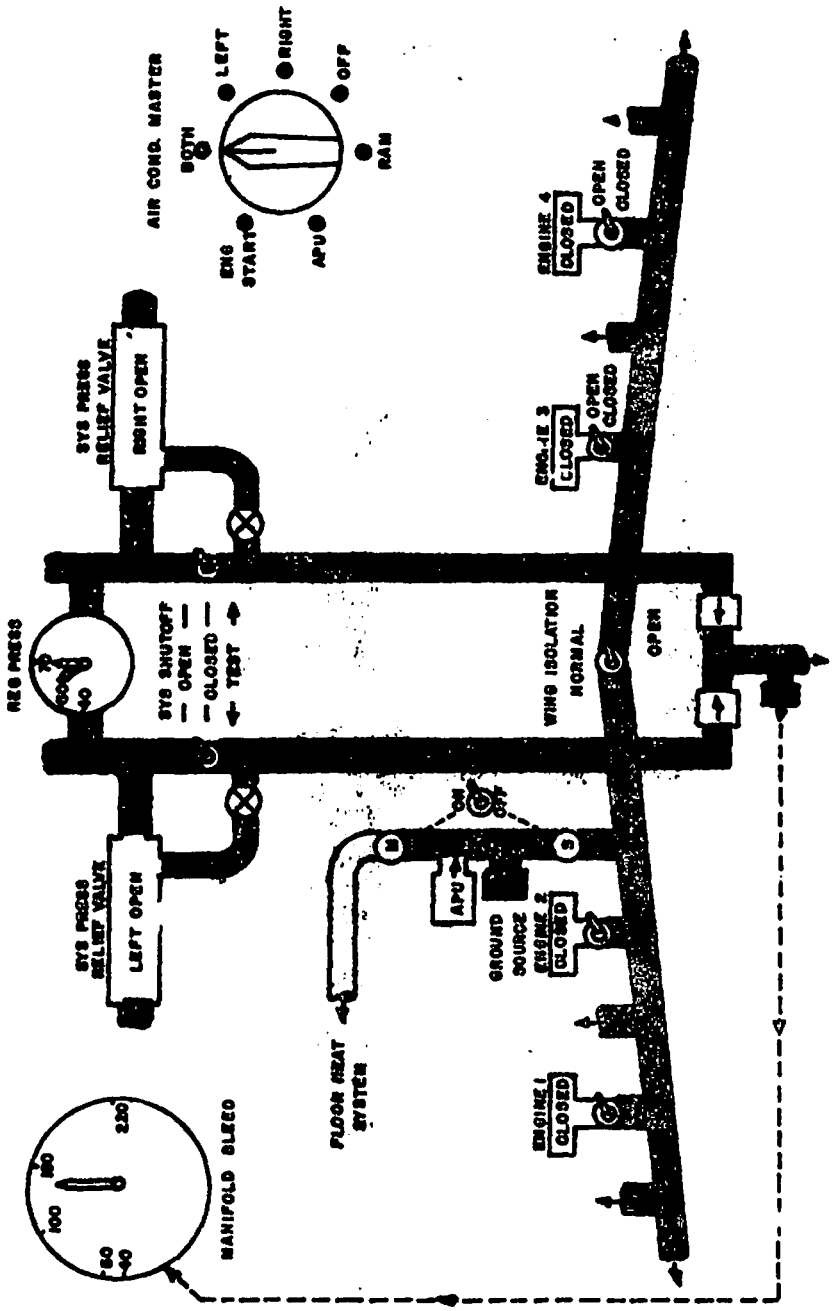

BLEED AIR SYSTEM SCHEMATIC

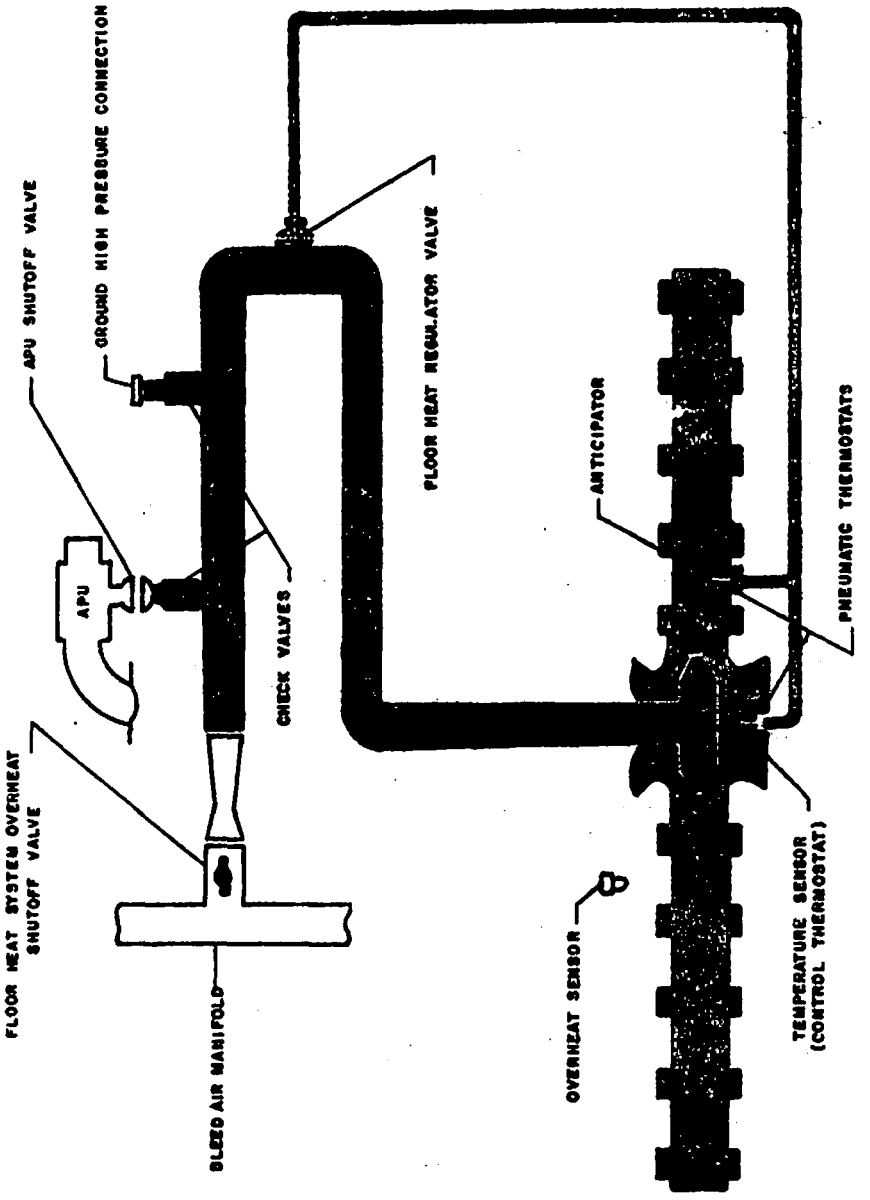

FLOOR HEAT SYSTEM SCHEMATIC

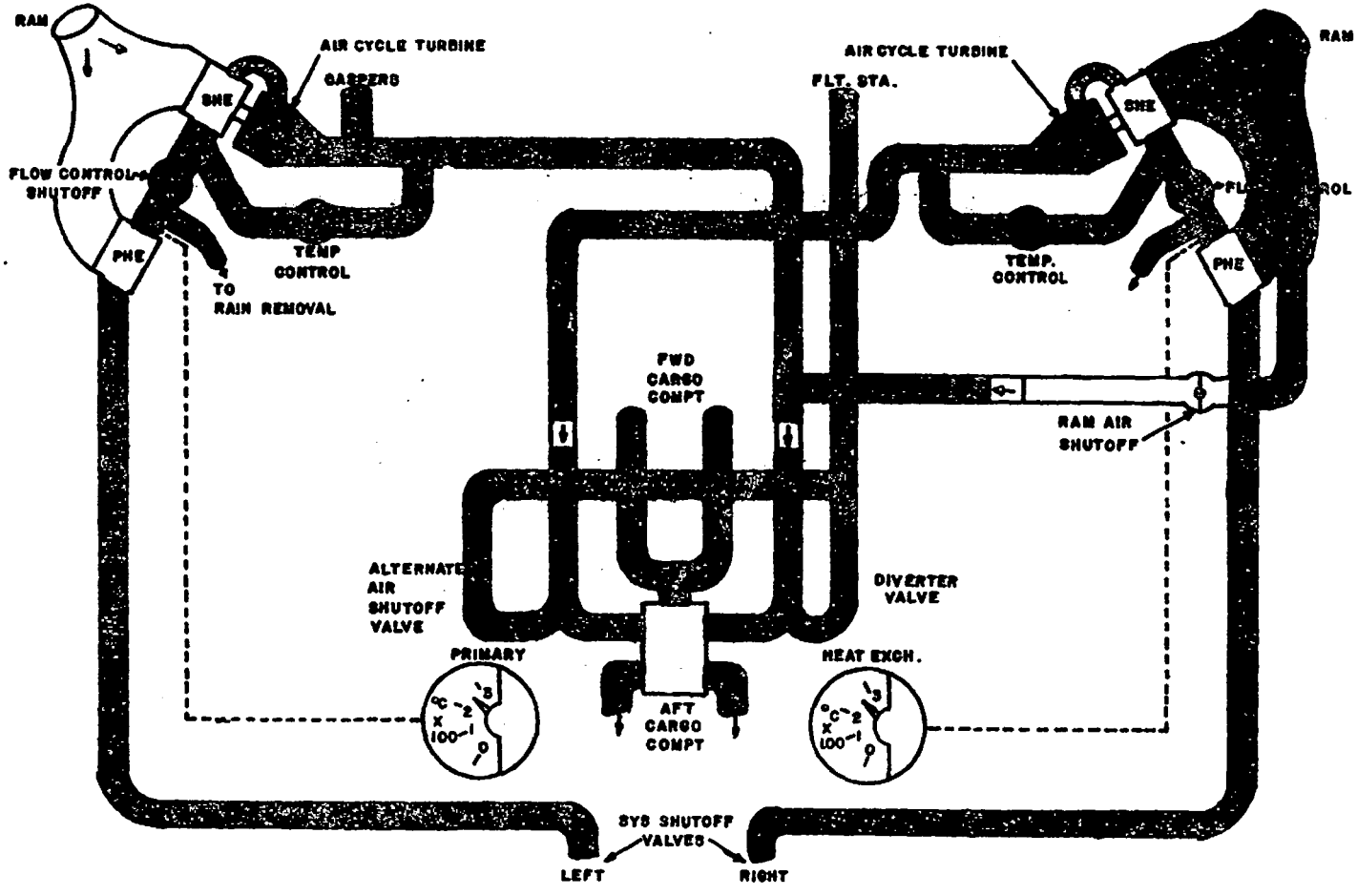

AIR CONDITIONING SYSTEM SCHEMATIC

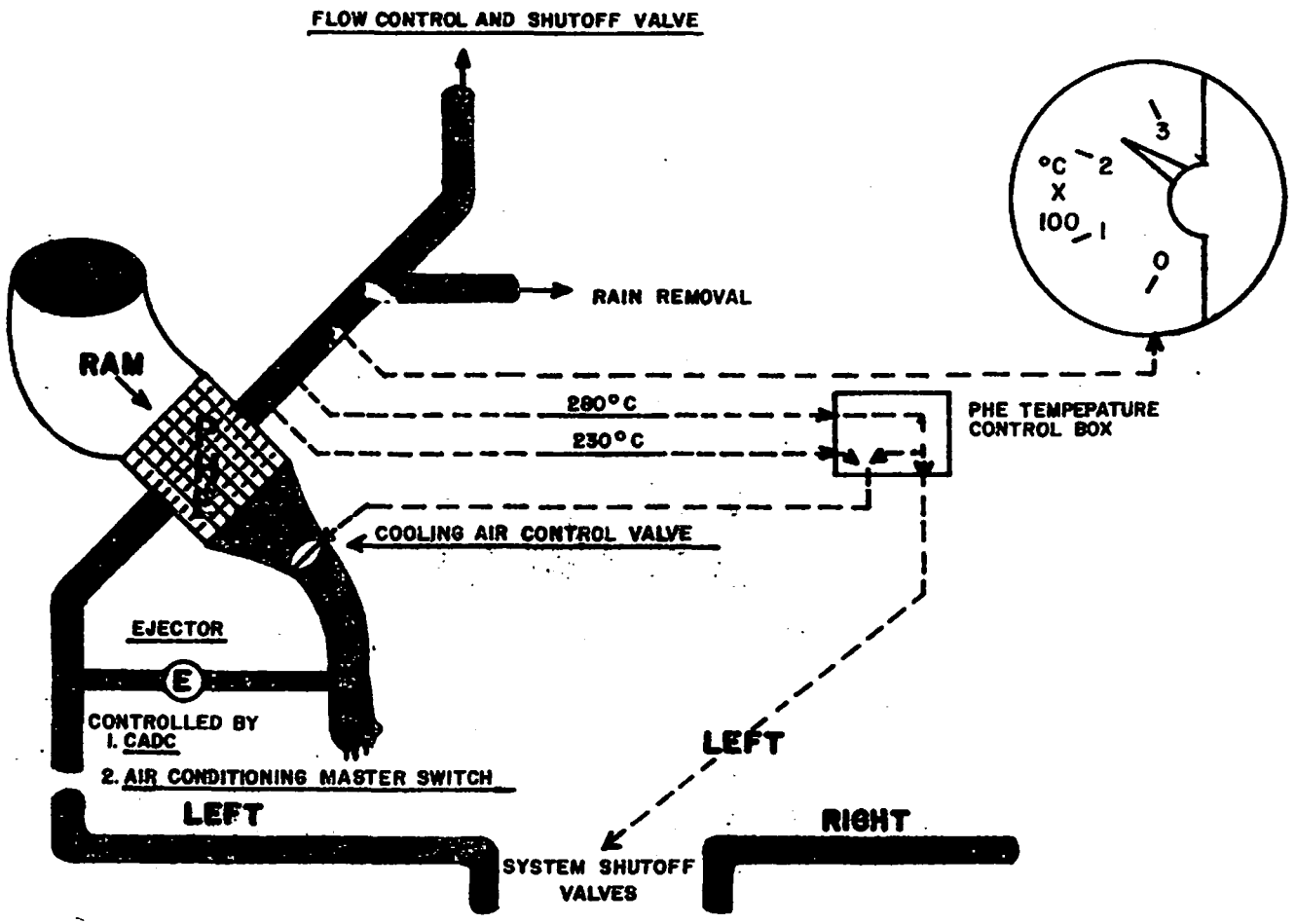

LEFT PRIMARY HEAT EXCHANGER

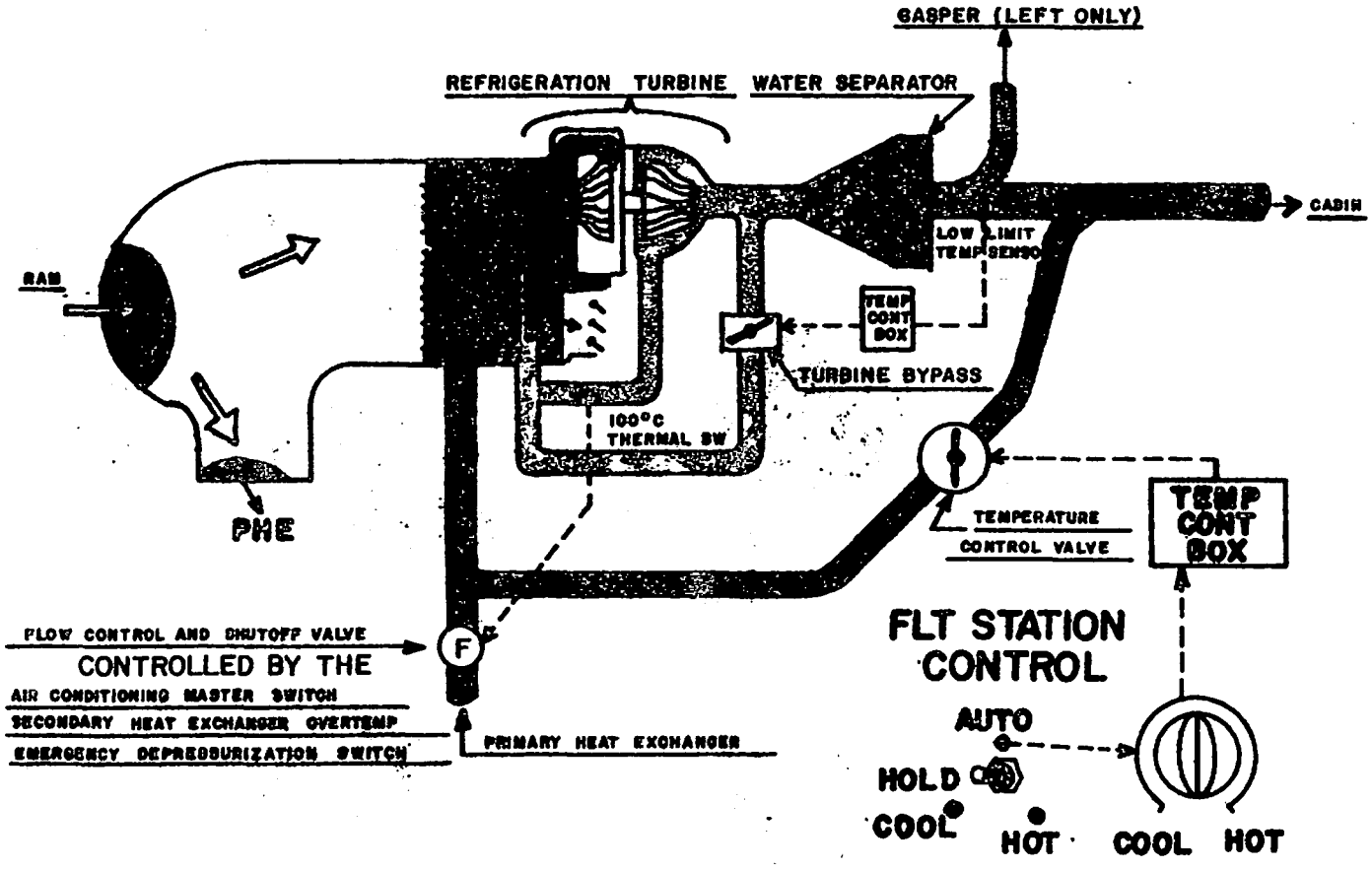

LEFT SECONDARY HEAT EXCHANGER
AND AIR CYCLE TURBINE SYSTEM

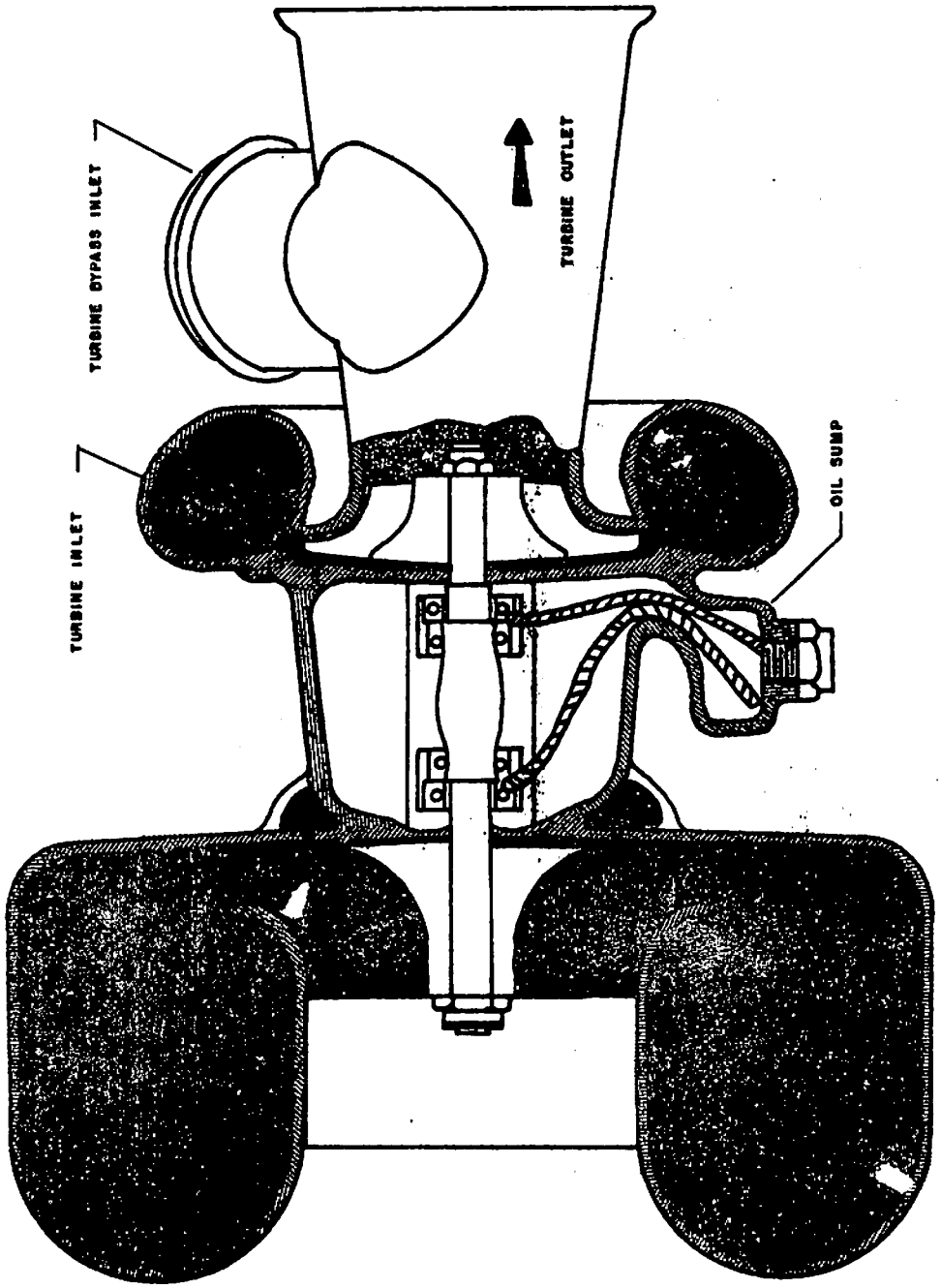

AIR CONDITIONING SYSTEM TURBINE AND FAN ASSEMBLY

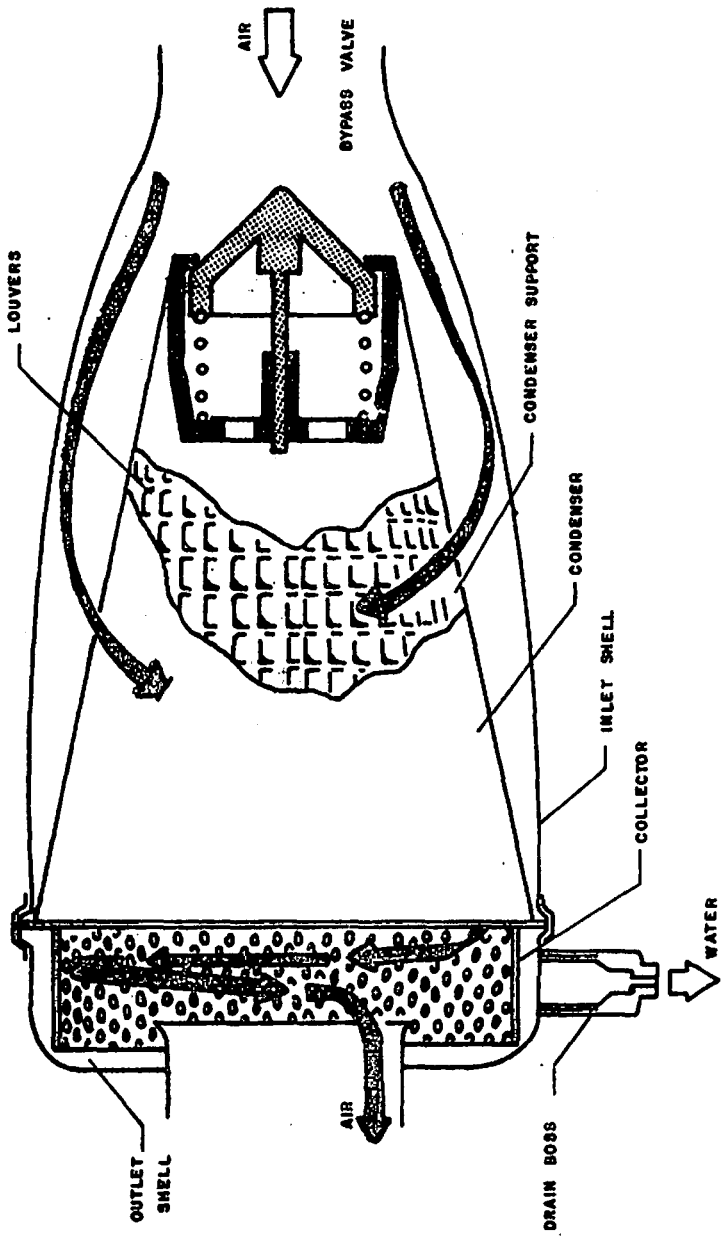

WATER SEPARATOR

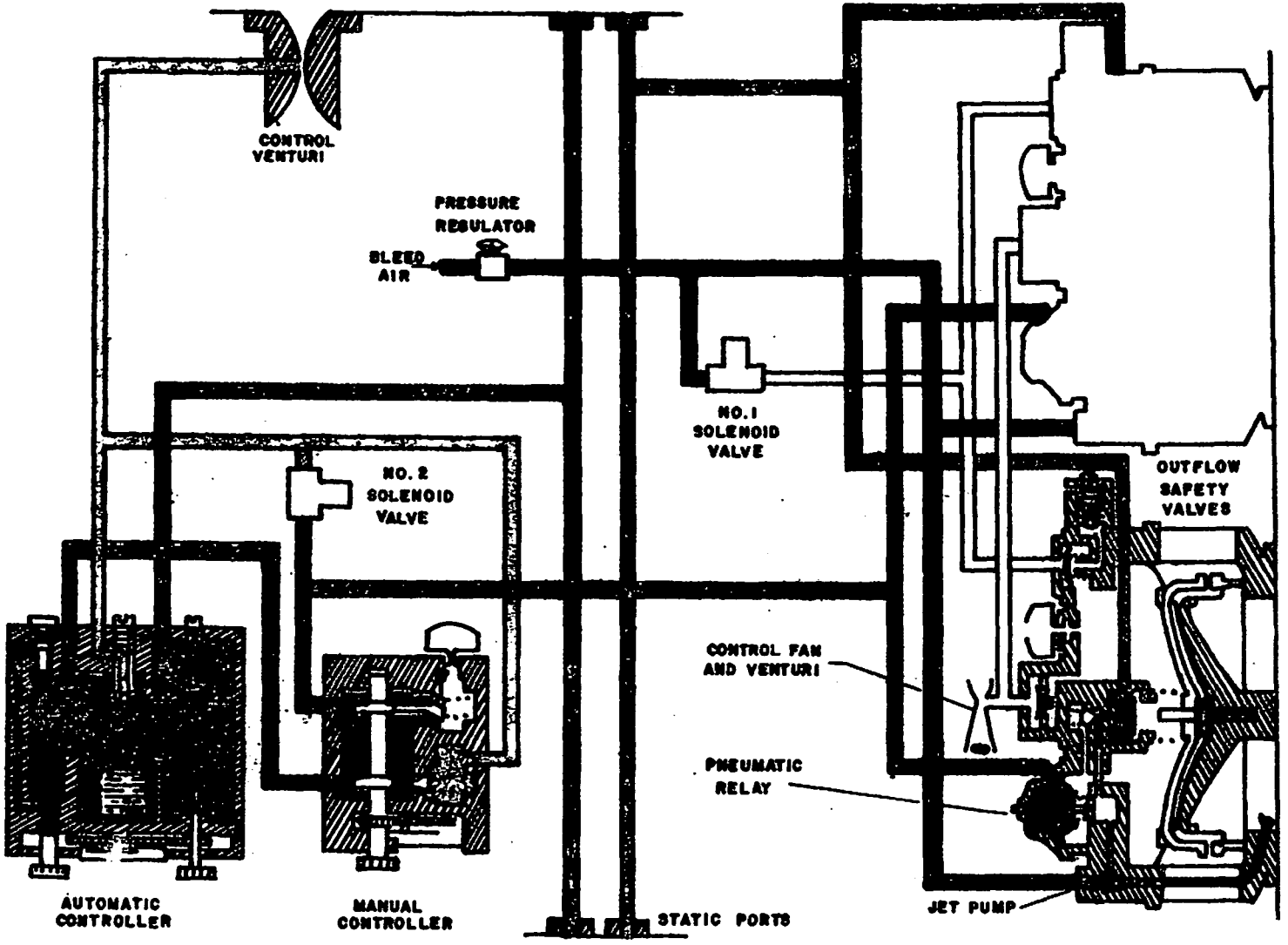

CABIN PRESSURE CONTROL FLOW DIAGRAM

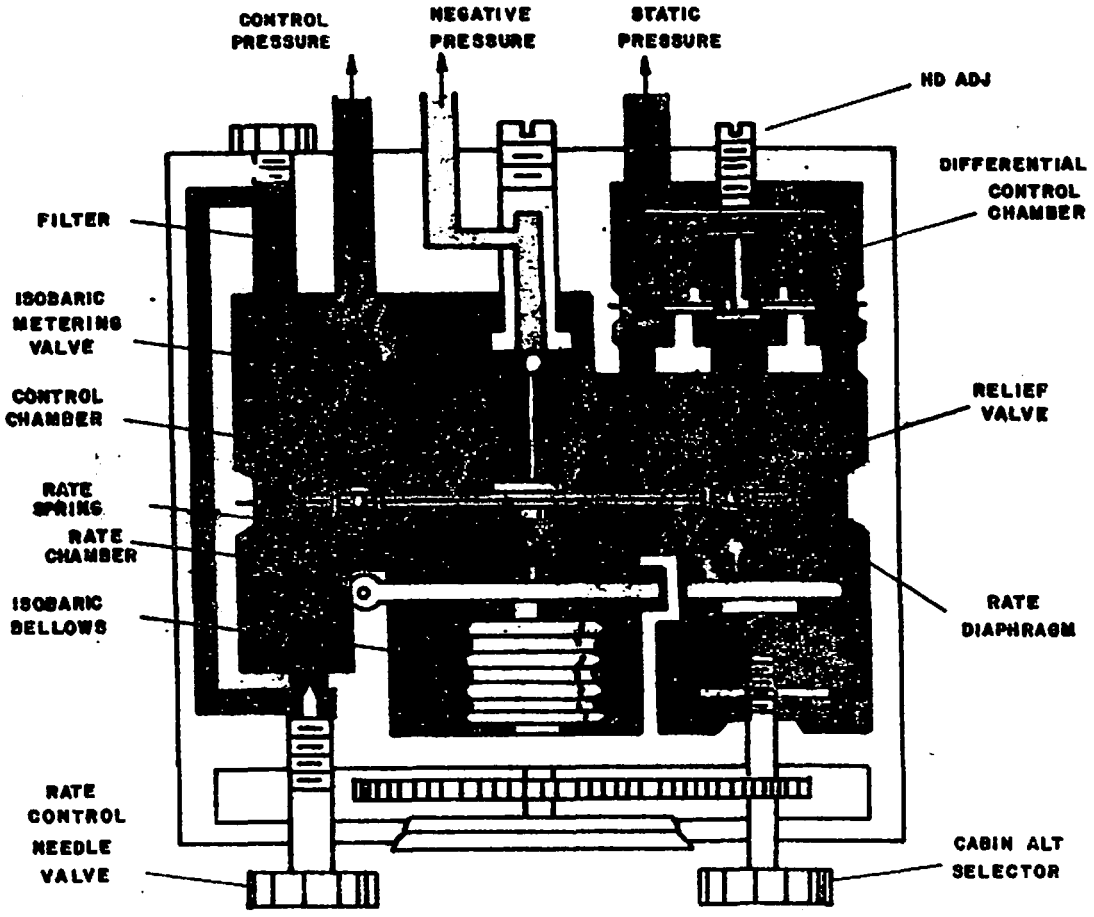

AUTOMATIC PRESSURE CONTROLLER

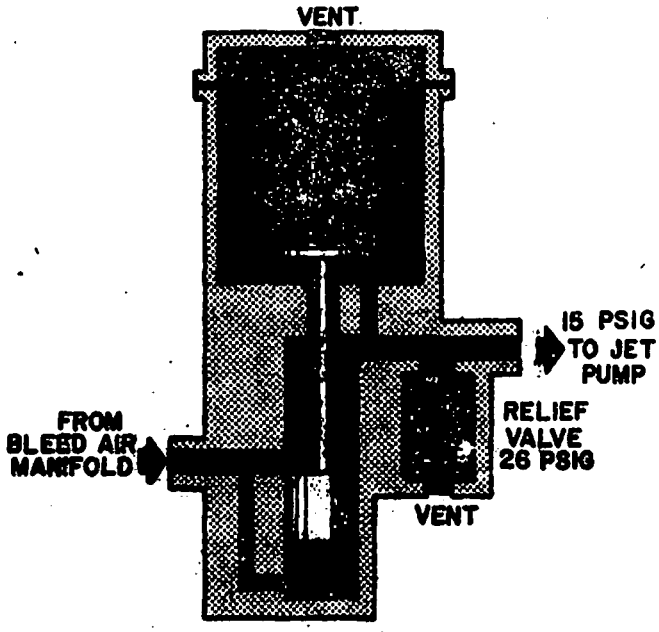

JET PUMP PRESSURE REGULATOR

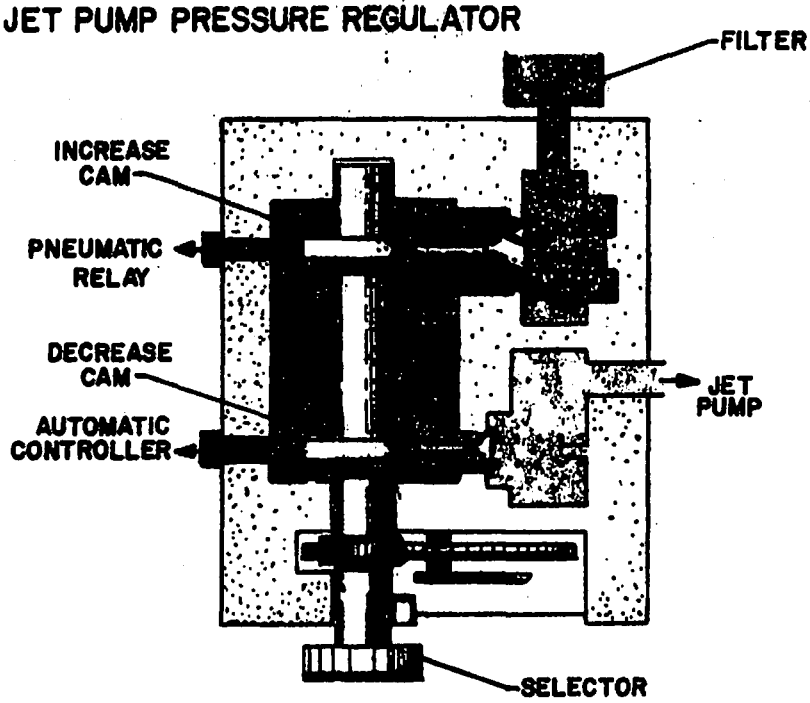

MANUAL PRESSURE CONTROLLER

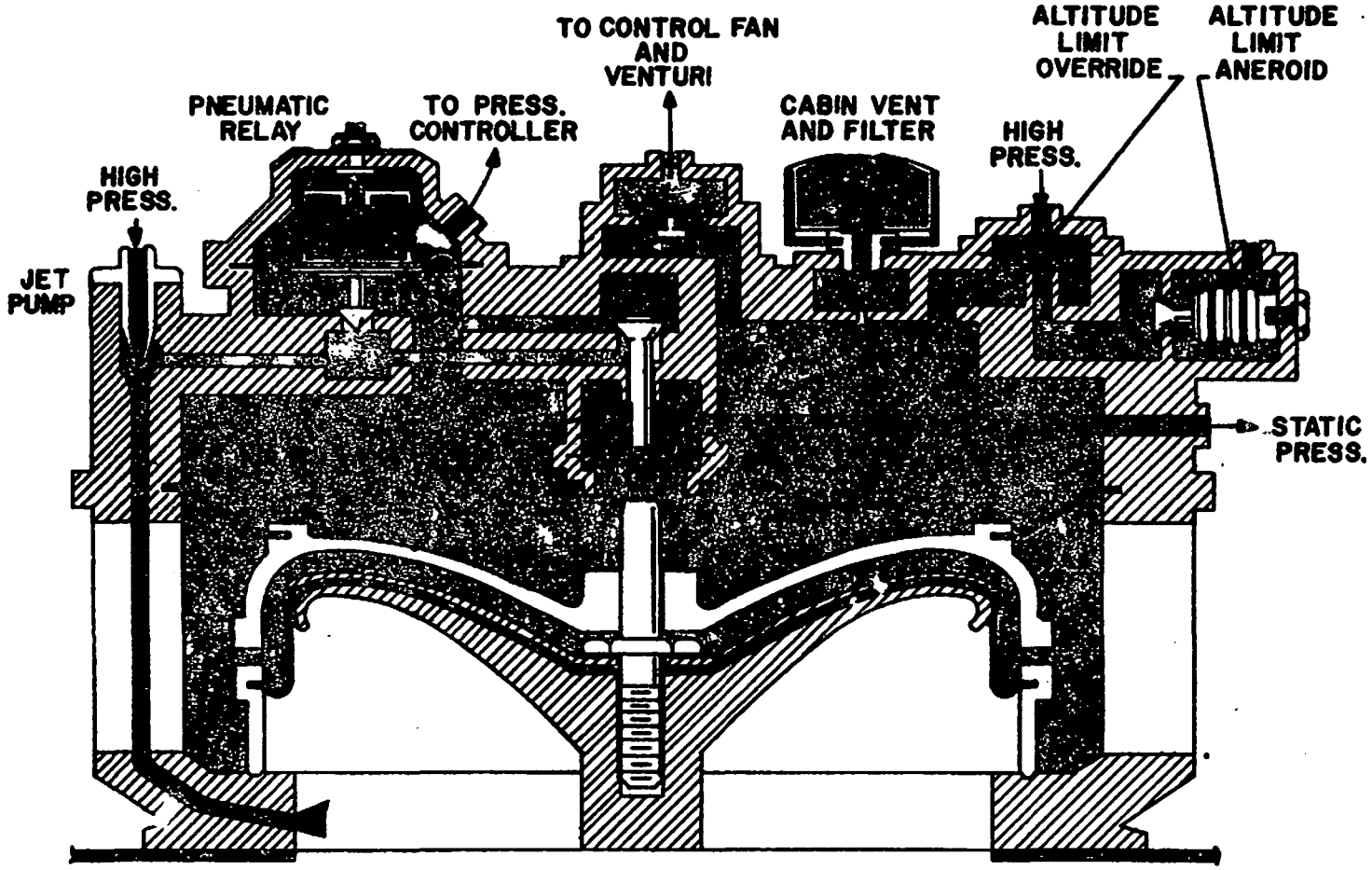

OUTFLOW/SAFETY VALVE

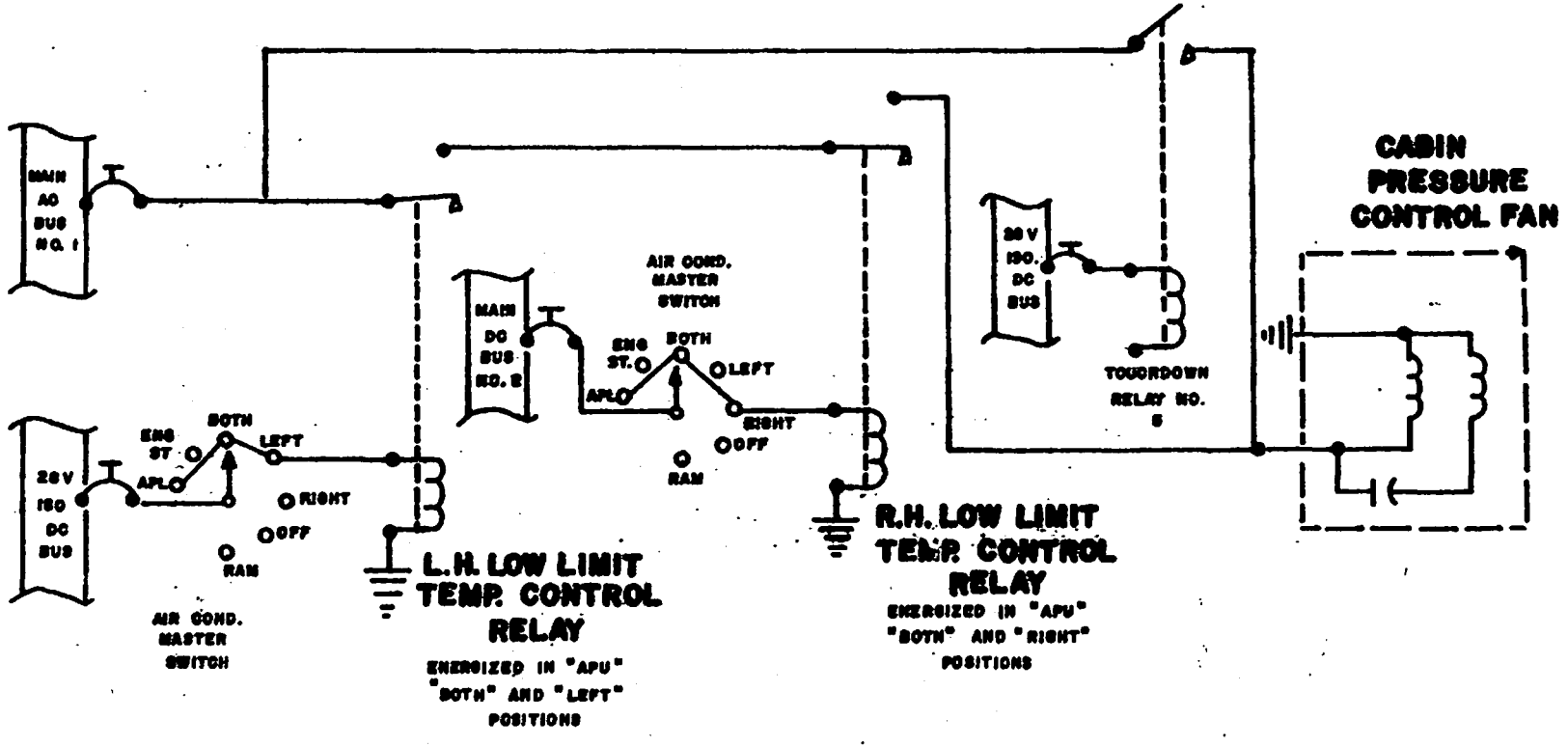

CABIN PRESSURE CONTROL FAN AND VENTURI

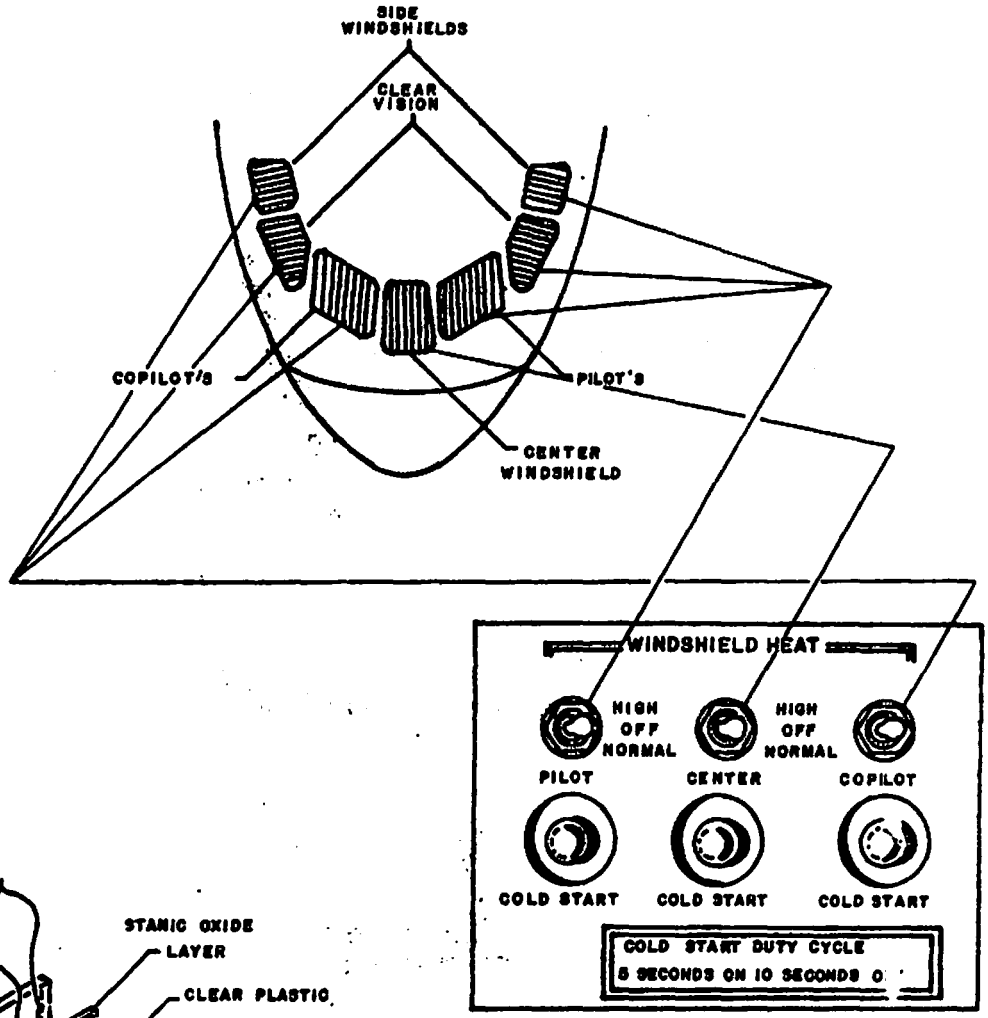

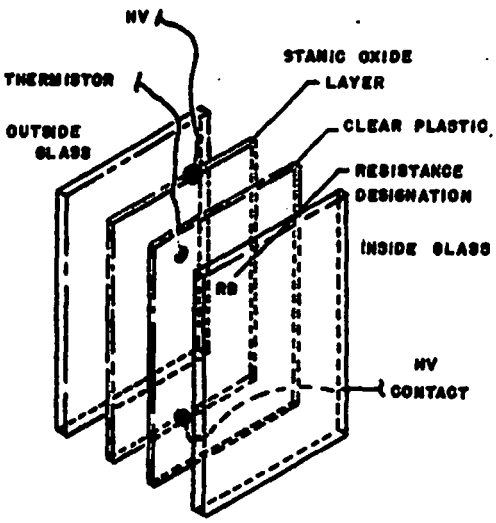

NESA WINDOW BREAK-DOWN

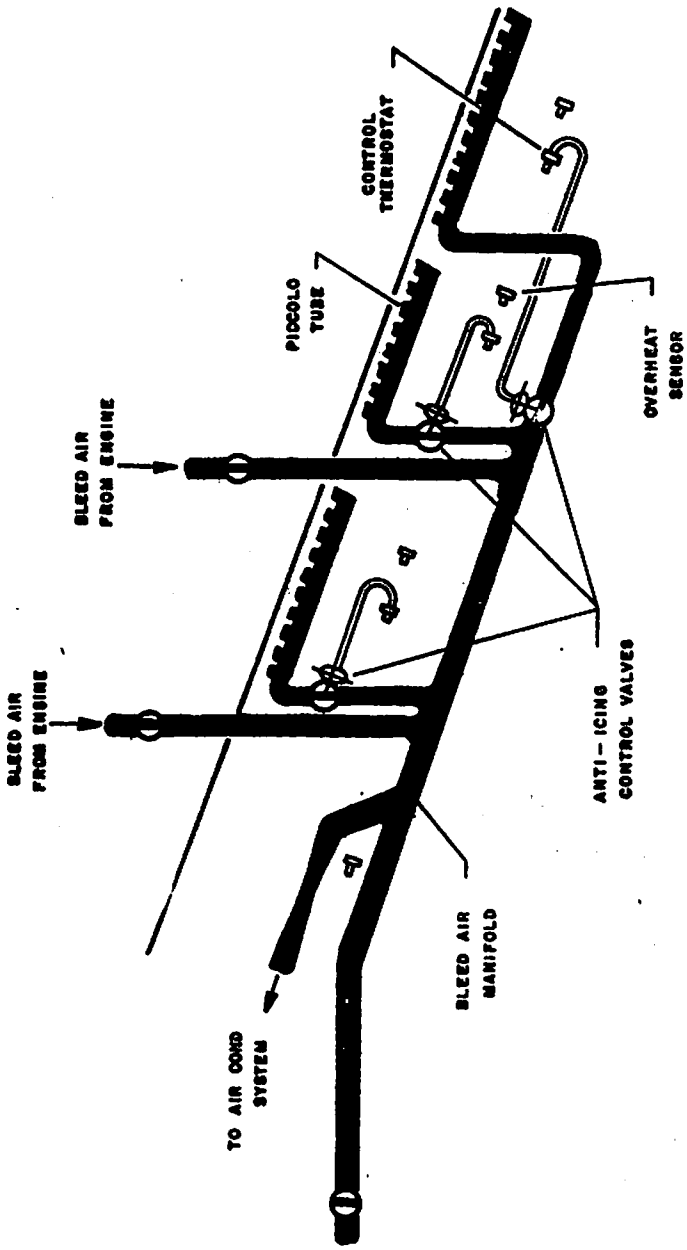

RIGHT WING LEADING EDGE ANTI-ICING

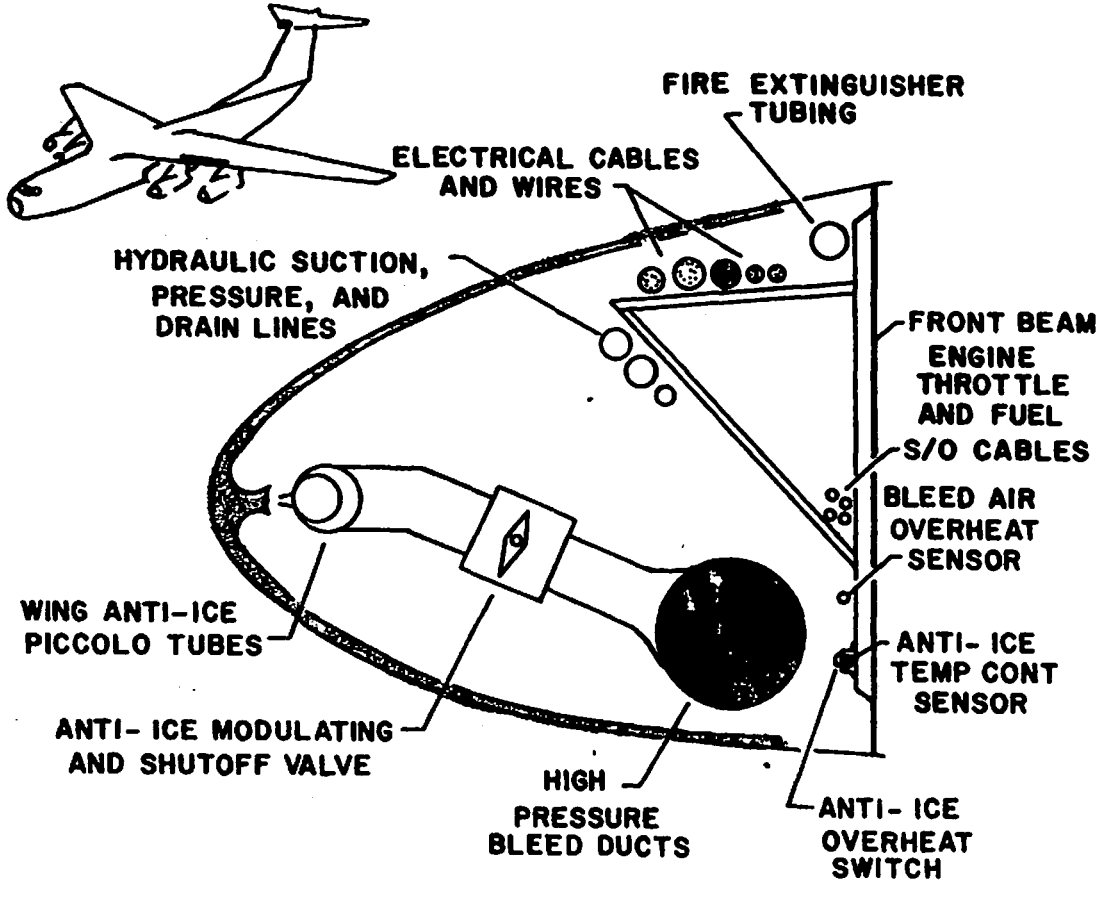

WING LEADING EDGE SECTION

Section VI Hydraulics

TABLE OF CONTENTS

Chapter 1

HYDRAULIC SYSTEMS GENERAL

The C-141 hydraulic system consists of separate and functionally independent systems designated as: Systems No. 1, 2, 3, and emergency nose landing gear extension system.

Each system is divided into a hydraulic power system and system components to which pressure is delivered. MIL-H-5606 type fluid is used. Each of the hydraulic systems has a service center where the hydraulic reservoirs are located.

The hydraulic systems' control and indicator panel is located on the lower left corner of the flight engineer's upper panel.

Hydraulic System No.1

Reservoir

The reservoir is in the No. 1 service center located on the right wall of the cargo compartment at the center wing section. The fluid capacity is 2.4 US gallons and it can be serviced in flight. A sight gage on the side of the reservoir is calibrated full and refill for zero psi and 3000 psi conditions. The reservoir is nonpressurized and vented to a vent box, and vents through a filter to the cargo compartment. Baffling on the inside prevents direct flow of fluid from the system return to the outlet port.

Electric Driven Suction Boost Pump

The suction boost pump located near the reservoir consists of a housing, centrifugal impeller and 115-volt, 3-phase AC electric motor. The pump is driven at a constant speed and is controlled by a 28-volt DC switch on the hydraulic systems' control and indicator panel. It is normally turned on before engine start and remains on until after engine shutdown.

The suction boost pump provides a constant flow of fluid from the reservoir to the inlet port of the engine driven pumps. The pressure range of the suction pump is 80-100 psi. Cooling and lubrication of the boost pump is insured by a bypass line routed from the pump's outlet port to the reservoir.

Low Pressure Warning Switch

The low pressure 28-volt DC warning switch is connected to the suction line below the suction boost pump. The Yellow PRESS LOW warning light located on the hydraulic systems' control panel will be out when suction line pressure is within operating range, and will come on when pressure drops below approximately 25 psi.

Ground Test Connections

Two ground test connections (suction and pressure) are located in the forward inboard portion of the right gear pod for a hydraulic ground test stand.

Priming Check Valve

The priming check valve downstream of the suction boost pump prevents fluid siphoning when a component is removed. It also prevents gravity flow of fluid back to the reservoir when the system is turned off. This insures that lubricating fluid will be available at the engine pump for the next start.

Supply Shutoff Valves

The motor-operated gate-type shutoff valves in each engine-driven pump supply line controls fluid flow to each individual engine-driven pump.

The valves, mounted in the wing leading edge above No. 3 and No. 4 engine pylons, is controlled by the ENG VALVES switch on the flight engineer's hydraulic control panel and is normally open. It can be closed by three different means: (1) The ENG VALVES switch, (2) Fire emergency handle, or (3) Manually positioning the power-off lever on the side of the valve. This lever is for ground maintenance only; it cannot be reached in flight. Circuit protection and power comes from the Isolated DC bus.

Engine-Driven Pressure Pumps

Two engine-driven, variable-volume, nine-piston, high-pressure pumps are mounted

on the accessory gear box drive on engines No. 3 and No. 4. The pumps are connected in parallel and provide hydraulic requirements for system No. 1.

The compensator within the pumps regulates the pressure and volume depending on system requirements. Normal pressure is 3000 ± 150 psi, with a maximum pressure 3400 psi for each pump. The pumps are lubricated internally by case drain return system in the normal mode of operation, and by the run-around system when the pumps are isolated. The bypass valve for the run-around system offsets at 2 - 3 psi.

High Pressure Filters

High pressure filters are installed downstream of the engine driven pumps on the right side of the engine accessory section, to prevent contaminates passing from the pumps into the system.

Should the filter element become obstructed, a pressure drop across the filter will occur. If the pressure drop reaches approximately 70 psid, a red (clogged filter) indicator extends from the top of the filter body, indicating the filter must be removed and cleaned as soon as possible. There is no bypass relief valve in the high pressure filters. An identical type filter is installed in the pressure side of the ground test connection forward inboard side of the right gear pod.

Return Filter

The return line filter, located just aft of the reservoir, filters the fluid before it enters the reservoir. Should the filter element become contaminated, a pressure drop across the filter occurs. If the pressure drop reaches 70 psid, a red (clogged filter) indicator extends from the top of the filter body. Should the element become so dirty that the pressure drop reaches 100 psid, an internal relief or bypass valve will open and allow return fluid to enter the reservoir unfiltered. Any time the indicator is extended, the filter element must be removed, cleaned, and reinstalled as soon as possible.

Case Drain Return Filter

The case drain return filter is installed in the case drain return line beside the system return filter. This filter is identical to the system return filter, with the exception of the size and flow volume. The red (clogged filter) indicator extends when pressure drop across the filter reaches 28 psid and the bypass opens at 40 psid.

Pump Pressure Shutoff Valves

The solenoid actuated valves are installed in each pump pressure line in the wing leading edge above No. 3 and No. 4 engine pylons. They are spring loaded open and electrically closed, and they are controlled by the ENG VALVES switch on the flight engineer's panel and can also be CLOSED by pulling the emergency fire handles. They are normally open. Circuit protection and power comes from

the Isolated DC bus.

Pump Low Pressure Warning Switch

The low pressure warning switch is located above each respective engine pod in the wing leading edge, downstream of the pressure shutoff valve. The switch is set at 1350 psi and operates a yellow PRESS LOW light on the flight engineer's hydraulic control panel. The light remains off as long as pressure is within operating range, and will come ON when pressure drops below operating range.

Isolation Check Valve

A check valve is located in the leading edge of the wing, downstream of the pump low pressure warning switch. Its purpose is to prevent reverse flow through an inoperative pump and prevent the pressure switch on one engine from being actuated when the engine is not operating.

Pressure Transmitter

The pressure transmitter is a bourdon-tube type located on the service center. It operates a 26-volt AC pressure gage on the flight engineer's hydraulic control panel. The pressure gage is calibrated in increments of 250 psi from 0 to 4000 psi. There is also a direct reading pressure gage located on the service center in the cargo compartment.

System Relief Valve

The relief valve is located on the service center to protect the system from excessive pressure in the event the engine driven pumps fail to compensate. One port of the valve is connected to system pressure and one to return. Should pressure reach 3560 psi, the valve is open and pump output will flow back to the reservoir. Once this valve is open, pressure must drop to approximately 3150 psi before it will reseat.

Hydraulic System No. 1 Pressure Usage

Hydraulic System No. 1 supplies pressure to:

1. Ailerons
2. Elevators
3. Rudder

Hydraulic System No. 2

Reservoir

The reservoir is on the No. 2 service center located on the left wall of the

cargo compartment near the center wing section, and can be serviced in flight. The fluid capacity is 4.2 US gallons with landing gear down, and 5.0 US gallons with gear up. When the landing gear is in the UP position, the fluid level will be above the filler neck. A sight gage on the side of the reservoir is calibrated FULL LG UP, FULL LG DN, REFILL LG UP, and REFILL LG DN.

The reservoir is nonpressurized and vented to a vent box and vents through a filter to the cargo compartment. It also has a dual check valve to prevent overflow of fluid in the event the reservoir overfills during ground checkout when No. 2 and No. 3 hydraulic systems are interconnected. The check valve also permits fast escape of air through the vent when the landing gear is in travel to the UP position. The reservoir has baffling on the inside to prevent direct flow of fluid from the system return to the outlet port.

Electric Driven Suction Boost Pump

The suction boost pump is located below the reservoir. It consists of a housing, centrifugal impeller and 115-volt 3 phase AC electric motor. The pump is driven at a constant speed and controlled by a 28-volt DC switch on the hydraulic systems' control panel. It is normally turned on before engine start and remains on until after engine shutdown.

The suction boost pump provides a constant flow of fluid from the reservoir to the inlet port of the engine-driven pressure pumps. The supply pressure range of the suction pump is 80-100 psi. Cooling and lubrication of the boost pump is insured by a bypass line routed from the pump's outlet port to the reservoir.

Hydraulic Driven Suction Boost Pump

The hydraulic motor-driven suction boost pump is mounted to the bottom of the reservoir. The motor consists of a nine-piston assembly which drives a vane-type suction boost pump. There is no ON-OFF control switch for the motor; it will operate anytime the No. 2 system is pressurized. It assists the electric-driven suction boost pump during peak loads and takes over if the electric-driven suction boost pump fails. There is no individual indicator light on the hydraulic systems' control panel for the hydraulic-driven suction boost pump. It uses the same low pressure warning system as the electric-driven suction boost pump.

When the pressure from the engine-driven pressure pump reaches approximately 500 psi, the hydraulic motor section of the pump begins to turn the boost section, and flow starts toward the inlet side of the engine-driven pump. As flow decreases, pressure increases until the pressure is approximately 80-100 psi. As system demand causes a flow, the pressure is decreased and the cycle starts again.

Ground Test Connections

Two ground test connections (suction and pressure) are located on the fuselage skin inside the left gear pod for a hydraulic ground test stand.

Hydraulic System No.2 Pressure Usage

Hydraulic System No. 2 supplies pressure to:

1. Ailerons
2. Elevators
3. Rudder
4. Pitch trim
5. Landing gear
6. Nose steering
7. Normal brakes
8. Emergency generator
9. Wing flaps
10. Wing spoilers & spoiler cable servo
11. Air refueling slipway door
12. Air refueling receptacle latches

Priming Check Valve

The priming check valve downstream of the suction boost pump prevents fluid siphoning when a component is removed. It also prevents gravity flow of fluid back to the reservoir when the system is turned off. This insures that lubricating fluid will be available at the engine pump for the next start.

Low Pressure Warning Switch

The low pressure 28-volt DC warning switch is connected to the suction line below the suction boost pump. The yellow PRESS LOW warning light located on the flight engineer's hydraulic systems control panel will be out when suction line pressure is within operating range, and will come ON when pressure drops below 25 psi.

Supply Shutoff Valves

The motor-operated gat.-type shutoff valves in each engine-driven pump supply line control fluid flow to each individual engine driven pump.

The valves, mounted in the wing leading edge above No. 1 & No. 2 engine pylon, are controlled by the ENG VALVES switch on the flight engineer's hydraulic control panel and are normally open. The valves can be closed by three different means: (1) The control switch, (2) fire emergency handle, or (3) manually positioning the power-off lever on the side of the valve. This lever is for ground maintenance only; it cannot be reached in flight. Circuit protection and power come from the Isolated DC bus.

Engine-Driven Pressure Pumps

Two engine-driven, variable-volume, nine-piston high-pressure pumps are mounted on the accessory gear box drive of engines No. 1 and No. 2. The pumps are connected in parallel and provide hydraulic requirements for system No. 2.

The compensator within the pumps regulates pressure and volume depending on system requirements. Normal pressure is 3000 ± 150 psi, with maximum pressure 3400 psi for each pump.

Pump lubrication for number 2 system is identical to number 1 system.

Pump Pressure Shutoff Valves

This is a solenoid actuated valve, installed in each pump pressure line in the wing leading edge above No. 1 and No. 2 engine pylons. It is spring loaded open and electrically closed, and is controlled by the ENG VALVES switch on the hydraulic systems' indicator panel, and can also be CLOSED by pulling the emergency fire handles. Circuit protection and power come from the Isolated DC bus.

Pump Low Pressure Warning Switch

The low pressure warning switch is located above each respective engine pylon in the wing leading edge, downstream of the pressure shutoff valve. The switch is set at 1350 psi and operates a pump PRESS LOW yellow light on the hydraulic systems' control and indicator panel. The light remains off as long as pressure is within operating range, and will come ON when pressure drops below operating range.

Isolation Check Valves

A check valve is located in the leading edge of the wing, downstream of the pump low pressure warning switch. Its purpose is to prevent reverse flow to an inoperative pump and prevent the pressure switch on one engine from being actuated when the engine is not operating.

Pressure Transmitter

The pressure transmitter is a bourdon-tube type located on the service center. It operates a 26-volt AC pressure gage on the hydraulic systems' control and indicator panel. The pressure gage is calibrated in increments of 250 psi from 0 to 4000 psi. There is a direct-reading pressure gage located on the service center in the cargo compartment.

System Relief Valve

The relief valve is located on the service center to protect the system from excessive pressure in the event the engine driven pumps fail to compensate. One port of the valve is connected to system pressure and one to return. Should pressure reach 3560 psi, the valve is open and pump output will flow back to the reservoir. Once this valve is open, pressure must drop to approximately 3150 psi before it will reseat.

High Pressure Filters

High pressure filters are installed downstream of the engine driven pumps on the right side of the engine accessory section, to prevent contaminates passing from the pumps into the system.

Should the filter element become obstructed, a pressure drop across the filter will occur. If the pressure drop reaches approximately 70 psid, a red (clogged filter) indicator extends from the top of the filter body, indicating the filter must be removed and cleaned as soon as possible. There is no bypass relief valve provided in the high pressure filters.

Return Filters

The return line filter located forward of the system reservoir filters the fluid before it enters the reservoir. Should the filter element become comtaminated, a pressure drop across the filter occurs. If the pressure drop reaches 70 psid, a red (clogged filter) indicator extends from the top of the filter body. Should the element become so dirty that the pressure drop reaches 100 psid, an internal relief or bypass valve will open and allow return fluid to enter the reservoir unfiltered. Anytime the indicator is extended, the filter element must be removed, cleaned, and reinstalled as soon as possible.

Case Drain Return Filter

The case drain return filter is located just forward of the reservoir. This filter is identical to the system return filters with the exception of the size and flow volume. The red (clogged filter) indicator extends when pressure drop across the filter reaches 28 psid and the bypass opens at 40 psid.

Hydraulic System No.3

Reservoir

The reservoir is on th No. 3 service center forward of system No. 2 reservoir, on the left wall of the cargo compartment. The fluid capacity is 4.8 US gallons and it can be serviced in flight. A sight gage on the side of the reservoir is calibrated 0-PSI FULL, 0-PSI REFILL, 3000-PSI FULL, 3000-PSI REFILL. Service instructions are placarded on the reservoir.

The reservoir is nonpressurized and vented to a vent box and vents through a filter to the cargo compartment. Baffling on the inside prevents direct flow of fluid from the system return to the outlet port.

Electric Motor Driven Pumps

Two electrically driven, high-pressure, variable-volume pumps, including the impeller-type suction boost pumps in the same housing, connected in parallel, are located in the left wheel well. A constant flow of fluid through the case

drain return provides lubrication and cooling. Normal pressure is 3000± 150 psi at 6000 rpm, and maximum pressure is 3400 psi for each pump.

Controls

A control switch for each pump is located on the hydraulic systems' control and indicator panel, and has ON-OFF-RAMP CONTROL positions. When the No. 1 switch is placed ON, the pump will start instantly. (There is a two-second time delay incorporated in the No. 2 pump circuit.)

The hydraulic control panel is decaled "Wait five seconds before starting second pump" to prevent overloading the electrical system. The RAMP CONTROL position of each switch transfers control of related pump to the ramp control panel located in the aft end of the cargo compartment.

In addition to the normal controls, system No. 3 pumps turn on automatically when any of the following is accomplished:

1. When spoiler control handle is moved out of the CLOSED position.

2. Anytime the EREO switch is in EMER OFF position and the spoilers become unlocked and move from closed position.

3. When both left or both right, or all four of the aileron power control switches are placed in the TAB OPERABLE position.

4. Either elevator control switch is placed to EMER position.

When the normal pump control switches are in the OFF position and the pumps are energized by any one or all of the automatic methods, the pumps will stop when the last of the automatic systems is returned to the normal position. The two-second time delay of No. 2 pump is effective when pumps are actuated automatically.

Two 80-cubic-inch hydraulic fuses are located on the No. 3 service center, downstream of each electric motor-driven pump, and prevent motor overloading during initial pump starting. The fuses are spring loaded open and vented to return, which allows the motors to come up on speed. The fuses are set to close off by fluid volume. When they close, system pressure will build up.

Isolation Check Valves

An isolation check valve located on the service center, downstream of each pump, prevents reverse flow, thus isolating pressure from an inoperative pump.

Pump Low Pressure Warning Switch

The low-pressure warning switch is located aft of the No. 3 reservoir on the left wall of the cargo compartment. The switch is set at 1350 psi and operates a PRESSURE ON light (green) on the brake pressure and anti-skid control and indicator panel, which is located on the pilots' center instrument panel. The light will stay ON above 1350 psi.

High Pressure Filter

A high-pressure filter located aft of No. 3 reservoir prevents contaminates passing from the pumps into the sytem. Should the filter element become obstructed, a pressure drop across the filter will occur. If the pressure drop reaches approximately 70 psid, a red (clogged filter) indicator extends from the top of the filter body, indicating the filter must be removed and cleaned as soon as possible. There is no bypass relief valve provided in the high-pressure filter.

Return Filter

The return-line filter located forward of the system reservoir filters return fluid before it enters the reservoir. Should the filter element become contaminated, a pressure drop across the filter will occur. If the pressure drop reaches 28 psid, a red (clogger filter) indicator extends from the top of the filter body. Should the element become so dirty that the pressure drop reaches 40 psid, an internal relief or bypass valve will open and allow return fluid to enter the reservoir unfiltered. Any time the indicator is extended, the filter element must be removed, cleaned, and reinstalled as soon as possible.

Case Drain Return Filter

The case drain return filter is located just forward of the reservoir. This filter is identical to the system return filters with the exception of the size and flow volume. The red (clogged filter) indicator extends when pressure drop across the filter reaches 28 psid and the bypass opens at 40 psid.

Pressure Transmitter

The pressure transmitter is a bourdon-tube type located on the service center. It operates a 26-volt AC pressure gage on the hydraulic systems' control and indicator panel. The pressure gage is calibrated in increments of 250 psi from 0 to 4000 psi. There is a direct reading pressure gage located on the service center in the cargo compartment.

Main Accumulators

Two 400-cubic-inch, piston-type accumulators are installed on the No. 3 service center, and are normally charged to approximately 3000 psi by No. 3 system. A direct reading pressure gage is installed on each accumulator.

These accumulators aid No. 3 pumps during peak loads. They can be used to start the APU. In addition, the accumulators can be used to furnish emergency brake pressure, when normal brake pressure is not available. Accumulator pressure is used for the emergency brake system, when electrical power is off (approximately 10 applications).

Accumulator Control Valve

The accumulator control valve (bypass valve) is electrically energized open when pumps are turned on manual or automatic, and deenergized closed when pumps are shut off.

Hand Pump

A double-action type hand pump, located on the left wall of the cargo compartment immediately below the system No. 3 reservoir, provides a means of pressurizing the accumulators, emergency brakes, ramp, and doors when the high pressure pumps are inoperable. Approximately 460 strokes of the hand pump are required to pressurize the accumulators to 3000 psi. A check valve is installed between the pump outlet port and the system pressure line to prevent pressure build-up against the pump, during normal operation. A direct-reading pressure gage is located near the No. 3 reservoir to indicate hand pump pressure.

System Relief Valve

The relief valve is located on the service center to protect the system from excessive pressure in the event the electric motor-driven pumps fail to regulate. One port of the valve is connected to the system pressure and one to return. Should pressure reach 3560 psi, the valve will open and pump output will flow back to the reservoir. Once this valve is open, pressure must drop to approximately 3150 psi before it will reseat.

Hydraulic System No.3 Pressure Usage

Hydraulic System No. 3 supplies pressure to:

1. Wing flaps
2. Wing spoilers & spoiler cable servo
3. Aileron tab lockout
4. Elevator emergency power
5. Ramp and doors
6. Emergency brakes
7. APU starter

Ground Interconnect Valves

Two interconnect valves are located between system No. 2 and No. 3 reservoirs. Both valves are controlled by one manually operated control handle. Moving the control handle to the INTERCONNECT position will position one valve to connect the No. 3 system pressure to the No. 2 system manifold, and the remaining valve will connect the No. 2 and No. 3 system reservoirs through an interconnect tube. With the control handle in the INTERCONNECT position, the No. 3 system electrical motor-driven pumps can be used to provide power for all subsystems normally operating on No. 2 system power.

The fluid level in the No. 2 and No. 3 system reservoir will remain constant because of the reservoir interconnect tubing. An isolation check valve prevents the flow of fluid through the pressure line from system No. 2 to system No. 3. This system is for GROUND CHECK ONLY, and the control handle must be in the CLOSED position before flight.

APU-Starter

The APU starter is driven by a hydraulic motor powered by pressure from the accumulators. Controls for the APU are located on the upper left corner of the flight engineer's panel. An APU ACCUM SEL switch allows the selection of No. 1, No. 2, or BOTH accumulators, as desired.

Each accumulator will last approximately 10 seconds when used to start the APU.

An additional accumulator is installed in the APU starter inlet line. This accumulator acts as a shock absorber, absorbing the initial starting pressure, and prevents excessive gearbox torque from being transmitted to the clutch. The Accumulator Control Valve and the two starter selector valves are located on the No. 3 service center. Each valve incorporates a manual override.

The APU, located on the left forward gear pod, supplies air for engine starting, air for environmental systems, and mechanically drives an AC generator during ground operation only.

Nose Land Gear Emergency Extension System

Reservoir

The hydraulic fluid reservoir is located under the flight deck in the right-hand (electronic) underdeck rack area. The fluid capacity is 0.9 gallon and can be serviced in flight through the filler neck. A placard is provided for servicing. A sight gage is mounted on the reservoir, and the reservoir is vented to a vent box in the underdeck area. Hydraulic fluid flows by gravity to the hand pump and check valve.

Hand Pump

A double-action type hand pump is located in the right underdeck electronic equipment compartment. When the handle is not in use, it is secured to the structure near the pump. A direct-reading pressure gage is on the front bulkhead, in the right electronic underdeck area, to indicate hand pump pressure.

The hand pump is operated to build up system pressure, which is limited to approximately 1200 psi, by a relief valve connected to the pressure line and to the reservoir.

Manual Selector Valve

A manually operated selector valve is located on the front bulkhead, in the

right electronic underdeck area below the pressure gage. A two-position valve, it has NORMAL and EMERGENCY positions.

Nose Land Gear Emergency Extension Systems

Nose Land Gear Emergency Extension is used to extend and lock the nose landing gear in the down position, if the No. 2 hydraulic system is inoperative.

Chapter 2

LANDING GEAR SYSTEM

The landing gear is a fully retractable tricycle type, consisting of a steerable dual-wheel nose gear and two "four-wheel bogie" main gears. All gears retract forward and up. The doors are actuated by gear movement through mechanical linkage. A door-locking mechanism prevents inadvertent opening of the main landing gear doors in flight. The landing gear system is electrically controlled and hydraulically actuated.

Normally the landing gear should retract in approxmiately 10 seconds and extend in approximately 15 seconds. The maximum airspeed for landing gear operation is 200 KCAS or 0.48 Mach. A maximum airspeed with landing gear extended is 235 KCAS or 0.55 Mach.

Main Landing Gear

Each main landing gear assembly consists of an oleo-pneumatic shock strut, an axle beam and axle assembly, torque arms, wheel and tires, drag braces, drag links and down lock, up lock, leveler rod, axle (bogie) beam positioner system, actuating cylinder, wheel brake assembly, and brake torque links.

Main Landing Doors

The main landing gear (MLG) doors are actuated by mechanical linkage and gear movement. Three doors are installed on each main landing gear pod; one upper door on top of each pod above the MLG strut, and two lower doors. All three doors open simultaneously, and the strut extends thru the upper door opening while the landing gear is extended. All doors remain closed when the landing gear is up and locked.

Main Landing Gear Door Uplock

When the aircraft is on the ground, the landing gear doors are open, and the door lock hydraulic actuator is pressurized to the unlocked position. The door lock hydraulic actuator is sequenced to the locked condition when the landing gear goes into the uplock position. The door lock system is designed to hold the MLG doors closed and prevent gapping while the MLG is up and locked in flight. In case of No. 2 hydraulic system failure, each door uplock latch assembly may be manually unlatched by using the red T-handle (Step No. 1) to allow the door to open.

Main Landing Gear Shock Struts

The stroke of the shock strut meets special requirements of C-141 aircraft. To reduce fuselage bending loads (stresses), the main landing gear has been placed as close to the center of gravity as possible. The overhang of the fuselage aft of the main landing gear, together with small ground clearance, limits

the tail-down angle during landing or takeoff. To compensate for this, a two-step action of the shock strut is provided. By setting the piston stroke at approximately 28 inches, the wheels are placed sufficiently below the fuselage to permit an approximate 11-degree tail-down angle at impact. During the first 17 inches of shock strut compression, the energy is absorbed at a normal rate by the action of the hydraulic fluid. The shock strut then compresses at a reduced rate, controlled by two fixed orifices in the strut, until the tail clearance is ample.

Leveler Rod Assembly

The leveler rod is a mechanical linkage which positions and holds the MLG axle (bogie) beam parallel to the retracted position. This provides clearance of the main landing gear doors during the last portion of retraction and the first portion of extension.

Axle (Bogie) Beam Positioner

The pneumatic-hydraulic axle beam positioning cylinder maintains the axle beam approximately perpendicular in the longitudinal axis of the shock strut assembly, while the gear is in the extended position for landing. It also provides a degree of snubbing action to prevent oscillations of the axle beam during landing, taxiing, and takeoff.

Main Landing Gear Downlock

The main landing gear downlock assembly is a combination of hydraulic action and mechanical linkage. When the landing gear is extended, the downlock latch assembly rides on the forward drag link and, as the drag link becomes straight, the latch rides over the mechanical stop and locks into place. Any aft movement of the latch is resisted by spring action inside the downlock cylinder. This spring action is overcome hydraulically when the gear is to be retracted, which forces the latch away from the stop. If the No. 2 hydraulic system fails, and the main landing gear doesn't lock in the down position, operating a red emergency downlock engage handle (Step No. 3) will mechanically move the associated gear to the downlock position.

Main Landing Gear (Ground) Safety Pin

The MLG ground safety pins are inserted through the drag brace aft of the downlock latch. The ground safety pins must be inserted from the inboard to outboard side of the strut. In the event an unsafe condition is indicated after a landing gear extension, the ground safety pins can be installed in flight through the gear inspection windows.

Main Landing Gear Uplock

The MLG is locked in the up position by an uplock assembly mounted on the fuselage in each wheel well. The uplock hook receives a roller on the torque tube

bellcrank forward of the door actuating mechanism. The roller forces the hook down into the locked position. The hook is held in the locked position by three links, a bellcrank, and a stop. The links are forced into an over-center position by a stop on one link which rests against the uplock bellcrank. Actuation of the hydraulic uplock actuating cylinder will cause rotation of the bellcrank and pull the links out of the over-center position. A spring attached to the hook then forces the hook out of the locked position.

In case hydraulic system No. 2 fails, the MLG uplock may be released manually by pulling a red T-handle (Step No. 2).

Nose Landing Gear

The nose landing gear assembly retracts forward into the nose section. The assembly consists of an air-oil shock strut, an axle, torque arms, a drag link and up-down lock assembly, an actuating cylinder, the wheels, and tires. The shock strut cylinder has a trunnion by which the nose gear is mounted to structural pillow blocks on each side of the wheel well. The nose gear is locked in either the up or down position by an up-down lock incorporated in the drag link.

Nose Landing Gear Doors

The nose landing gear doors enclose the nose wheel well when the gear is in the retracted position. The doors open and close by the operation of the nose landing gear through a system of adjustable pushrods and bellcranks. The doors consist of two clam-shell doors covering the forward section and one single door on the aft section. When the gear is in the up position, all doors are closed. Door closure is maintained by preset tension adjustments through the gear door linkage. The clam-shell doors move downward and outboard as the gear extends, and then back to the closed position when the gear is down. The aft door moves down and back under the fuselage, and remains in this position until the gear is retracted. Bumpers on the aft door contact the fuselage to provide additional support for the door.

Nose Landing Gear Up-Down Lock

The nose landing gear up-down lock mechanism is incorporated in the drag link assembly, and the actuating cylinder is mounted on the nose gear shock strut. The cylinder is connected to the mechanism through bellcranks and a pushrod. The gear is locked in either the up or down position by two cranks forced into an over-center position. The cranks are forced into the over-center position by a combination of a spring and hydraulic pressure to the actuating cylinder, and are maintained in the locked position by the spring assembly. Hydraulic pressure to the unlock side of the actuating cylinder unlocks the up-down lock mechanism.

Nose Landing Gear (Ground) Safety Pin

The ground safety pin is inserted in the nose landing gear (NLG) drag brace as a safety precaution when the aircraft is on the ground.

An additional pin, which is longer, is stowed near the NLG inspection window (right underdeck area). This pin is used in flight, after emergency extension of the NLG.

Friction Spin Brake

The nose landing gear spin brake stops the nose wheels from spinning when the gear is in the retracted position.

Landing Gear Selector Valves

The three-position four-way selector valves are 28-volt DC solenoid controlled and hydraulically positioned. Manual override buttons provide manual control in the event 28-volt DC power is lost. The door lock, gear downlock, and the MLG selector valves are all located on the No. 2 hydraulic service center. The NLG selector valve is located in the left underdeck area under the autopilot "J" box.

Landing Gear Control Panel

The landing gear control panel is located on the right side of the pilots' center instrument panel. The two-position (UP-DOWN) landing gear control handle is electrically connected to all of the gear solenoid operated selector valves.

A 28-volt DC, solenoid operated locking mechanism prevents movement of the landing gear lever from the DOWN position until the main landing gear struts are fully extended after takeoff. The circuits controlled by the landing gear lever receive 28-volt DC power from the Isolated DC Bus through a LANDING GEAR CONT circuit breaker on the flight engineer's No. 3 circuit breaker panel. A manual release, adjacent to the landing gear lever, can be used to release the locking mechanism in case of electrical malfunction.

Landing Gear Warning Lights

Two red warning lights in the landing gear control handle will illuminate when the landing gear control handle is placed to DOWN, and will remain illuminated until all landing gears are down and locked. The light will also illuminate when the landing gear control handle is placed to UP, and will remain illuminated until all landing gears are up and locked. The warning light will illuminate if a throttle is retarded to approximately one inch forward of IDLE START position and all landing gears are not down and locked. The light will also illuminate if one or both MLG door uplocks are not locked, or if there is a bad MLG door uplock micro-switch.

Landing Gear Warning Horn

A warning horn, located in the flight station, will also sound if a throttle is retarded to approximately one inch forward of IDLE START position and all landing gears are not down and locked. Pressing the HORN SILENCER button on the landing gear control panel will cause the horn to silence, but the light in the handle

will remain illuminated until the throttle is advanced or all gears are down and locked.

The warning horn will sound if the flap control handle is placed to the LANDING position and all gears are not down and locked. The horn silencer button will not silence the horn if it sounds under these conditions.

Landing Gear Warning Horn Cut-Out Switch & On/Off Light

A two-position ("NORMAL", "OFF") gear-up warning horn cut-out toggle switch is located on the copilot's paradrop & ADS panel. When the switch is in the "NORMAL" position, the horn will operate in its normal manner. When moved to the "OFF" position, the horn will not sound except when the wing flap lever is moved to the "Landing" position when the landing gear is not down and locked. The ON/OFF light, located just below the switch, illuminates when the toggle switch is moved to the "OFF" position, and the light is out when the toggle switch is in the "NORMAL" position.

Landing Gear Position Indicators

Three 28-volt DC flag-type position indicators, located above the landing gear lever, show the position of each landing gear. A miniature wheel and tire flag indicates gear down and locked, an UP flag indicates gear up and locked, and a black and yellow striped flag indicates the gear is neither up and locked nor down and locked. Limit switches, actuated by movement of the landing gear to the down-and-locked or up-and-locked positions, control the position indicators. Power for operation of the indicator is supplied from the Isolated DC Bus through a LANDING GEAR POS IND circuit breaker on the No. 3 circuit breaker panel.

Warning Light and Horn Test Switch

The warning light and horn test switch is located on the gear control panel and is used to test the landing gear warning light and horn system.

Axle (Bogie) Beam Position Indicator

A 28-volt DC flag-type bogie position indicator for each of the main gear bogies is located on the pilots' center instrument panel. A miniature wheel and tire flag indicates the associated bogie is in the position required for landing. (Within 5° perpendicular to the main gear shock strut.) A black and yellow striped flag indicates the bogie is either in transit or is up. Limit switches, actuated by movement of the bogies, control the position indicators. Power for operation of the indicators is supplied from the Isolated DC Bus through a BOGEY POS IND circuit Breaker on the flight engineer's No. 3 circuit breaker panel.

Normal Operations

Retraction

Movement of the landing gear control handle to the UP detent rotates a cam to actuate a limit switch. The limit switch closes to complete the circuit from the Isolated DC Bus to the up solenoid of the landing gear selector valves. The up solenoid is energized and opens the selector valves to permit hydraulic system No. 2 pressure to be applied simultaneously to the downlock and gear actuating cylinders of the left main and right main landing gears. Hydraulic system No. 2 pressure is also applied simultaneously to the up-down lock and gear-actuating cylinder of the nose landing gear. This permits the actuating cylinder of each MLG to retract and raise the gear. As each main landing gear reaches the full up position, a roller on each landing gear door mechanism torque tube arm strikes the uplock hook. The up-down lock cylinder of the nose landing gear retracts to unlock the over-center locking mechanism and thus permit the actuating cylinder to retract and raise the nose landing gear. The NLG is locked in the raised position by the over-center locking mechanism linkage.

Switches, which are actuated closed by movement of the landing gear to the up-and-locked position, complete circuits to the landing gear position indicators on the landing gear control panel to provide gear-up indications. With the gears up and locked, the hydraulic pressure is off. As the gears move to the up and locked position, sequence switches complete the circuit through a relay to the main landing gear door lock selector valve opening the valve to port hydraulic system No. 2 pressure to the MLG door lock actuating cylinders to engage the door uplock latches. As the door locks are locked, the landing gear warning lights are extinguished and the door lock selector valve is de-energized.

Hydraulic system return pressure is automatically applied to the brakes during gear retraction to stop the rotation of the main wheels. Nose gear wheel spin is stopped during final retraction by contact with friction pads installed in the wheel well.

Extension

Movement of the landing gear control handle to the DOWN detent actuates limit switches. One limit switch, which closed to complete the circuit from the Isolated DC Bus to the down solenoid, becomes energized and opens the MLG selector valve to permit hydraulic system No. 2 pressure to be applied simultaneously to the uplock, gear-actuating cylinders of the left and right main landing gears, and to the door uplock actuators.

Hydraulic system No. 2 pressure is also simultaneously applied through the NLG selector valve to the up-down lock and the gear actuating cylinder of the NLG. The uplock cylinders of the main landing gear extend to release the uplock hooks through mechanical linkage, and the up-down lock cylinder of the NLG extends to unlock the over-center linkage. The actuating cylinders of the left main, right main, and nose landing gears then extend to assist gravity in lowering the landing gear. When each main landing gear reaches the fully extended position, limit switches energize the downlock actuator solenoid valve, after the drag braces have reached the full down position. The downlock latch then slides into

the recess to lock each main landing gear in the extended position. The nose gear is locked in the extended position by the over-center locking linkage.

Limit switches, which are actuated closed by movement of the landing gear to the down-and-locked position, complete circuits to the landing gear position indicators on the landing gear control panel to provide a landing gear down indication, and to the bogie position indicator panel to indicate bogies in position.

Chapter 3

NOSE GEAR STEERING SYSTEM

Introduction

Hydraulic pressure for the nose gear steering system is supplied by Hydraulic System No. 2 from the nose gear downline. A steering wheel, located on the pilot's side console, provides the control for steering the nose wheels. The nose gear wheels can be steered 60 degrees left or right of center with the steering wheel.

Nose gear steering by movement of the rudder pedals is also incorporated. A maximum of eight degrees steering left or right of center is available. The steering wheel tracks this movement.

Turning the steering wheel mechanically positions a control valve which ports pressurized fluid to the left or right nose gear steering cylinders to actuate the rack-and-pinion type steering mechanism. A cable-type mechanical feedback mechanism automatically repositions the control valve to neutral when the selected degree of turn is achieved.

A centering mechanism automatically holds the control valve in neutral when the nose wheels are not being turned, allowing free castering of the nose wheels and providing hydraulic shimmy dampening.

Centering cams within the strut automatically position the nose wheels in the line of flight when the nose landing gear strut is fully extended after takeoff

Control Wheel Steering

The nose gear steering system is controlled by a nose gear steering wheel, located on the pilot's side console. A nose wheel position scale, with the placarded directions of "Left" and "Right" arranged to either side of a white center-position index mark, is installed immediately beneath the wheel. Two and three-fifths revolutions of the steering wheel are required to turn the nose wheel from center, through a full 60 degrees left or right of the nose wheel centered position. The steering wheel is disengaged and locked when the gear is not in the down and locked position.

Rudder Pedal Steering

The rudder pedal steering system provides the pilot with the capability of maintaining steering control of the aircraft during takeoff and landing while retaining aileron control. Rudder pedal steering is 8 degrees either side of center. Rudder pedal steering is available when main gear touchdown switches are activated or forward main wheel spinup occurs. The rudder pedal steering system design is such that the steering wheel rotates with pedal movement and the rudder pedals move somewhat with steering wheel rotation unless restrained. The system also provides the capability of full rudder in one direction and full wheel rotation in the other direction steering.

Chapter 4

WHEELS AND BRAKES

Each main landing gear has four tubeless tires mounted on two-piece forged aluminum alloy wheels. Wheel halves are individually balanced and can be reassembled in any position. Three thermal relief plugs are located in each inner wheel half to prevent tire explosion due to excessive brake heat (390°F). The plugs have a fusible metal core that will melt and allow the tire to deflate before the wheel temperature gets high enough to cause a tire blowout.

The braking system provides normal, emergency, and parking brakes with an antiskid system in the normal brakes system. A mechanical locking system maintains the application of hydraulic brake pressure when parking brakes are used. Pressurized hydraulic fluid to operate the brakes may be supplied from the normal (No. 2) or emergency (No. 3) hydraulic system. Manual selection of either system is provided by a brake selector switch on the brake and antiskid panel on the center instrument panel.

Brake Assembly

A multiple-disc, manually adjusted brake is installed on each main wheel. Hydraulic fluid under pressure pushes eleven equally spaced pistons against a nonrotating disc. This action compresses the disc assembly. Half of the discs rotate with the tire. The other half, spaced alternately between the rotating discs, are nonrotating. Each nonrotating disc is sintered iron, which provides friction against the steel rotating discs. The rotating discs are held in place by means of retainer blocks, which are fastened to the wheel assembly. Compressing the discs provides the braking action by pressing the nonrotating and rotating discs together against a final nonrotating disc which cannot move. Eleven brake release spring-loaded devices are fastened to the inner nonrotating disc. When hydraulic pressure is released from the piston, the spring-loaded device pulls the disc away, and the wheel is allowed to turn freely.

Controls and Indicators

A two-position (NORM-EMER) toggle switch, located on the pilots' center instrument panel, selects the hydraulic system to be used to actuate the brakes. The NORM position selects hydraulic system No. 2 pressure. The EMER position selects hydraulic system No. 3.

Two 26-volt AC hydraulic brake pressure indicators, adjacent to the brake pressure selector switch, give a visual indication of available brake pressure. Operation of the indicators is dependent upon the position of the brake selector switch. If the brake selector switch is positioned to NORM, the upper brake pressure indicator registers the brake pressure available from hydraulic system No. 2. If the switch is positioned to EMER, the lower indicator registers the pressure available from hydraulic system No. 3.

Normal Brake System

The normal brake system is activated by No. 2 hydraulic system pressure, which is controlled by one side of each of the two dual pilot metering valves, and by the four dual antiskid control valves. The pilot metering valves are located under the flight station floor. The pilot metering valves apply control pressure to the antiskid valves located on the left and right brake panels in the cargo compartment. Hydraulic pressure is then routed to the brake assemblies.

Brake Selector Valves

The brake selector valves, which are solenoid-operated, are deenergized open, and are controlled through the brake selector switch. The valves are wired electrically through the brake selector switch so that, in the NORM position, the normal brake selector valve is de-energized open, and the emergency selector valve is energized closed. In the EMER position, the emergency brake selector valve is deenergized open, and the normal brake selector valve is energized closed. If there is a power failure, both valves will direct pressure to the pilot brake metering valves.

Pilot Brake Metering Valves

There are two of these metering valves: One valve is for the right wheel brakes, and the other is for the left wheel brakes. One valve of each dual valve assembly is connected to emergency pressure and return. Each dual valve assembly consists of two identical piston and sleeve metering assemblies, which are fitted into the dual-bore housing. Both pistons are actuated at the same time by a bellcrank assembly; however, brake pressure is effective only through one valve, depending on the position of the brake selector valve. The valve is mechanically actuated through linkage from the brake pedals.

Antiskid Valves

The eight antiskid valves are solenoid controlled. When the antiskid system detects a skid or locked wheel condition, the valve is energized and ports brake pressure to return. As soon as the wheel starts to speed up again, the valve is deenergized and braking action is reapplied. Metered fluid from the pilot brake metering valve enters the antiskid valve. The fluid is directed to the top of the control piston. As pressure builds up on the top of the control piston, the piston is forced downward to overcome the control spring. This movement unseats the metering poppet, which ports hydraulic pressure to the brake.

The amount of poppet opening depends on the pressure from the pilot brake metering valve. When a rapid deceleration is detected by the skid detector and amplified in the control box, a signal is sent to the modulating solenoid on the valve. When this solenoid is energized, metered fluid to the control cylinder is blocked. This action opens the system return passage, metered fluid is relieved, and the wheel rotation occurs; both modulating and dump solenoids are energized. System inlet pressure forces the preload piston upward, opening the poppet valve. The pressure from the brake is then "dumped" into the system return line, and the wheel is free to turn until the detector signal deenergizes the solenoids. The valves are located on the brake valve panel.

Hydraulic Fuses

There are eight hydraulic fuses in the brake system; both normal and emergency systems use these fuses. Without such protection, the failure of a hydraulic line or component downstream from the valve could cause complete loss of fluid in the systems.

Shuttle Valve

The shuttle valve consists of a piston which is free to move from one side of the valve to the other; thus, if hydraulic pressure is greater on the normal brake pressure end, the piston moves to the emergency brake pressure end and seats. This prevents normal pressure from entering the emergency lines. If emergency brake pressure is greater than normal brake pressure, the piston will move to the normal inlet and seat, closing off the normal lines. Pressure then cannot enter the normal brake pressure lines.

Emergency Brake System

In the event the normal brake system fails, the brake selector switch on the brake and antiskid panel can be moved to EMER to engage the emergency brake system.

Hydraulic pressure for the emergency wheel brake system is supplied by the electrically driven pumps of hydraulic supply system No. 3 and is independent of the positions of the landing gear selector valves. The pressurized fluid applied to the brakes is routed through a set of main metering valves. The dual main metering valve is installed in the cargo compartment aft of the No. 2 hydraulic system service center. The control pressure for metering the pressure applied to the brakes is routed to the main metering valves through the pilot brake metering valves.

The antiskid brake control system is inoperative when the emergency brake system is being used.

Two accumulators in hydraulic supply system No. 3 provide a standby emergency wheel brake system when the electrically driven pumps of hydraulic supply system No. 3 are inoperable. A minimum of approximately ten brake applications can be made with both accumulators fully charged.

NOTE: In case of DC electrical power failure, the deenergized valves admit both system No. 2 and system No. 3 hydraulic pressures to the brake system. The shuttle valve is positioned by the system supplying the greater pressure.

Parking Brake

The parking brake is set by depressing the brake pedals, and pulling the T-handle on the pilot's instrument panel. The T-handle is connected by a flexible shaft to mechanical linkage. When the pedals are depressed, the brake linkage applies pressure to the pilot brake dual metering valves and, at the same time, allows

the parking brake to lock the pedals in the depressed position. This action keeps hydraulic pressure applied to the brake metering valves. The parking brakes can be released by depressing the brake pedals.

Antiskid System

A fail-safe antiskid brake control system provides maximum braking efficiency and prevents locking of the wheels in the event excess brake pressure is metered by the pilot during any phase of ground operation above 15 knots. The system is energized by a switch located on the pilots' center instrument panel.

The ON position of the switch is effective only if the brake pressure switch is in the NORM position. When this condition is satisfied, the ON position arms the 28-volt DC antiskid circuits; and when both main gear struts are depressed, the circuits are completed through the touchdown circuit to provide antiskid braking. The GND TEST switch position is a momentary position and provides a means of testing the antiskid system for fail-safe operation. Holding the switch in the GND TEST position while applying brakes will result in the following sequence of events: brakes release, the DET OUT and ANTISKID OFF lights come on, and braking action gradually returns.

Brakes Released Light

A green, BRAKES REL light is provided on the brake pressure and antiskid control panel on the pilots' center instrument panel. Illumination of this light with the landing gear handle in the down position and the antiskid switch ON, advises the pilots that the antiskid locked wheel circuit will prevent brakes being applied until wheel spin-up after touchdown. This light does not sense brake pressure, but is illuminated by an electrical signal through the antiskid control box. If the light does not illuminate, locked wheel protection is not available at touchdown and there is a possibility of blown tires if the pilot applies any amount of brakes prior to, or immediately after touchdown.

The BRAKES REL light receives power from Main DC Bus No. 1, through the ANTISKID circuit breaker. Ground test of the light circuit is made by placing the antiskid control switch to ON, and normal brakes selected and annunciator test switch at TEST, at which time the light should illuminate.

Antiskid Operation

The skid control system is primarily based on controlling the skid in its beginning stage. Braked wheel speed is converted to an AC signal which is proportional to the wheel acceleration and deceleration. The signal is supplied to a control box on the left side of the cargo compartment. The control box detects, from the AC input signal from the detector, both excessive wheel deceleration and nonrotation. The control signals are transmitted to the antiskid control metering valve, where brake hydraulic pressure is reduced by metering action until wheel speed is restored. The valve then begins to increase brake hydraulic pressure at a gradual predetermined rate until either skid control action is repeated or the pressure demanded by the pilot is reached.

If the pilot demands sufficient braking action to cause skidding, the skid control system will apply and release the brake pressure, as necessary, to obtain a nearly constant braking action without skidding. The resultant braking action gives maximum stopping action. Locked wheel control provides skid protection for any wheel which may be off the runway.

Antiskid Fail-Safe

Fail-safe action prevents prolonged brake release in the event of the malfunction of the antiskid system. Warning lights inform the pilot that the skid control system has malfunctioned or that the system is off. ANTISKID OFF lights, one on the pilot's instrument panel and one on the copilot's instrument panel, indicate two or more wheels have lost braking action due to antiskid malfunction. When this happens, the skid control system turns itself off, and the brakes are under manual control. The pilot may also obtain this condition by turning the ANTISKID switch to OFF. The DET OUT lights, located on the pilot's and copilot's instrument panels, indicate that there is a continuous brake release action on one wheel only. Skid control is provided over a speed range covering the maximum landing speed to a minimum taxi speed of approximately 15 knots. Below 15 knots the antiskid is inoperative.

Skid Detector

The skid detector is a small alternator which supplies an AC signal to the control box. The output of this alternator is low, since only signal voltage is supplied to the control box for amplification. The detector is located in the landing gear axle and fastens to the axle nut. The detector splined shaft (coupling) slips into a splined receptacle on the wheel dust cap. The rotor of the detector, therefore, turns with the wheel. Any acceleration or deceleration of the wheel is transferred directly to the alternator. Any change of rotor speed causes a change in signal to the control box which may, in turn, cause a change in the operation of the antiskid valve.

Brake System Failure

If the NORM BRAKE PRESSURE indicator shows a loss of system pressure, check that the No. 3 HYD SYSTEM PRESS ON light is illuminated. Place the brake pressure selector switch to the EMER position.

This will supply pressure to the brakes from the No. 3 hydraulic system. Use the brakes cautiously because the antiskid system is inoperative when pressure is supplied by the No. 3 hydraulic system.

Antiskid System Failure

If any one skid detector fails, the DET OUT lights will illuminate, and antiskid protection will be available only on the remaining seven wheels. If two or more skid detectors fail, the ANTISKID OFF lights will illuminate, and skid protection will be lost on all wheels. If the ANTISKID OFF light illuminates, the antiskid switch should be placed to the OFF position to prevent possible erratic operation

of the normal brakes.

Brake Limitations

The brakes are limited in the amount of work they can perform and still function properly. A measure of the amount of heat absorbed by the brakes is the amount of work performed by the brakes. The amount of work done is the kinetic energy expended, measured in millions of foot-pounds per brake. The amount of heat added to the brakes for each braking effort is cumulative and is determined by the speed of the aircraft and the gross weight at the time the brakes are applied.

*See Section 5 of TO 1C-141A-1 for detailed information and charts.

Chapter 5

CARGO DOOR AND RAMP SYSTEM

The cargo door and ramp system is used for ground loading and aerial delivery. The system consists of an internal pressure door, ramp, petal doors, and operating control. The system is operated by No. 3 hydraulic system. In flight, the system is operated from the pilot's and copilot's paradrop and ADS panels. Ground operation is controlled from the cargo door and ramp control panel after the system is armed from the pilot's control panel and door selection is made at the door and ramp control panel. The pressure door may be individually controlled from the forward crew door interphone and PA panel (inflight only), or the cargo door and ramp control panel.

Pilot's Controls and Indicators

The pilot's controls and indicators are located on the pilot's paradrop and ADS control panel. The petal door opening is 65 degrees. The DOOR ARMING switch is a two-position OFF - ARM toggle lock switch that is set to ARM to energize the system. The ALL DOORS switch is a three-position OPEN - OFF - CLOSE switch that initiates system operation. Four indicator lights on the panel (EXTERNAL CL, INTRANSIT, PRESS OPEN, PETAL OPEN) illuminate to indicate door status.

Copilot's Controls and Indicators

The copilot's controls and indicators are located on the copilot's paradrop and ADS panel. The controls and indicators consist of an ALL DOORS switch and four indicator lights which are identical to those on the pilot's panel. However, the pilot's ALL DOORS switch has priority over the copilot's switch and can override any door movement initiated by the copilot.

Navigator's Indicator

A cargo doors OPEN light on the navigator's ADS and jump light panel illuminates when the cargo doors are open to the position selected on the pilot's control panel.

Cargo Compartment Controls and Indicators

Controls and indicators for the system are located on the forward crew door and interphone panel and on the cargo door and ramp control panel. The PRESS DOOR ONLY switch on the crew door interphone and PA panel is a three-position OPEN - OFF - CLOSE guarded switch. This pressure door switch will control the opening function only, it WILL NOT close the pressure door. Arming of the system will be indicated when the DOORS ARMED indicator on the panel illuminates. The pilot's and copilot's ALL DOORS switches will override any operation initiated by this switch. The INTRANSIT and ALL OPEN lights on the panel illuminate during system operation to indicate door status.

The cargo door and ramp control switches located on the DOOR AND RAMP CONTROL panel are: an ALL DOOR switch, RAMP switch, PETAL DOOR switch, and PRESSURE DOOR switch.

The ALL DOOR switch has OPEN, OFF, and CLOSE POSITIONS to allow for sequencial operation of all doors. The RAMP switch has a LOWER, RAISE, and OFF position to regulate ramp operation. The PETAL DOORS switch has positions for selection of the amount of petal door opening on the ground. The three-position (OPEN, OFF, CLOSE) PRESSURE DOOR switch permits independent operation of the pressure door whenever the system is armed, the ramp is up and the petal doors are closed.

Chapter 6

WING FLAP SYSTEM

Wing flaps are used to change the relatively low-lift wing needed for high speed flight to a high-lift wing needed for slow landing and takeoff speeds. This is accomplished by changing the camber and area of the wing. The flaps are double-slotted Fowler-type and consist of two sections on each wing. They are extended or retracted by jackscrew actuators operating from a torque tube drive which is connected to a gear box driven by two hydraulic motors powered by No. 2 and No. 3 systems.

Position Indicator

The wing flap position indicator is a 28 volt DC Selsyn-type located on the pilots' center instrument panel. The indicator is calibrated in percent of travel in increments of ten percent. (100% equals 45 degrees.) The transmitter is located on the gearbox output drive. Power for this system comes from the 28 vdc bus.

Wing Flap Lever

The wing flap lever, on the control pedestal, has three detent lock positions, placarded: FLAPS UP, TAKEOFF-APPROACH, and LANDING. Additional markings are provided for the 25 percent (of fully extended) and 50 percent postions. Any percentage of fully extended flaps can be selected with the lever. A spring-loaded friction brake locks the lever in position once a selection has been made. The aft edge of the lever knob must be tilted upward to release the brake.

In conjunction with the flap lever, there is a lockout solenoid controlled by the spoiler lever. It adds approximately 50 pounds of force to the flap handle, anytime the spoiler lever is out of the closed position in flight with the flaps lever in the up position.

Flap Drive Gearbox

The flap drive gearbox is located on the aft side of the rear wing beam. Most of the components in the flap system are installed on the gearbox assembly.

Control Selector Valve

The selector valve is a tandem valve which provides a synchronizeu flow from each hydraulic system to the flap drive motors. The valve has an orifice-type damper to control the rate of pilot input motion, which prevents excessive surges in the system.

Hydraulic Motors

Two identical motors installed on the gearbox drive the flaps up or down in 15 seconds. If only one system is used, the flaps will travel at half speed or take 30 seconds for full travel in either direction. Each motor has a brake which is released by hydraulic pressure and applied by springs.

Manual Shutoff Valve

Mounted on the gearbox is a manually operated shutoff valve which shuts off both system pressures for maintenance, servicing, or to isolate the system in flight. To operate, pull down on handle and rotate 180 degrees to the closed detent position.

Manual Isolation Shutoff Valve

The manual isolation shutoff valve is located to the right of the gearbox in the No. 3 system pressure line and provides a means of ground testing the flaps on No. 2 system through the interconnect valve. It may also be used in flight to isolate the No. 3 hydraulic system.

Flow Control Regulator

There is one flow control regulator in each return line to prevent overloading of either system and overspeeding of the hydraulic motors.

Limit Switch Assembly

There are three limit switches contained in a single housing driven by the le t hand inboard flap panel. The Full Up Switch (0% flaps) controls the spoiler lockout mechanism. The 20 Degree Switch (45% flaps) increases the autopilot gain for nose down trim to prevent ballooning as flaps are extended. The 34° Takeoff and Approach Switch (75% flaps) is one of the items that completes the circuit to the gree. TAKEOFF light on the pilot's instrument panel.

Asymmetry System

The asymmetry system compares the movement of the flap panels symmetrically (outboard to outboard, etc.), and stops flap movement if either set of panels get out of synchronization 3 degrees or more. After an asymmetry condition and shutoff has occurred, it cannot be reset in flight.

Flap Asymmetry Light

A FLAP ASYM light on the annunciator panel goes on if the flap asymmetry system has caused the flaps to be locked. The light also illuminates if a malfunction causes at least one of the solenoid-operated, spring-loaded torque tube brakes to engage, or causes the asymmetry shutoff valve to close. Under the malfunc-

tioned condition, illumination of the light indicates only that the flaps are locked; they may or may not be in an asymmetric condition.

Asymmetry Detectors

There is one asymmetry detector for each flap panel which is driven by a sprocket and chain from the flap panel itself. Each one sends a comparison signal to the computer amplifier which compares the signals and trips the shutoff valve to the flap motors if an asymmetrical condition exists. An asymmetry brake on the outboard end of each torque tube is also applied by the computer amplifier when an unsymmetrical condition exists, locking the torque tube. Resetting of the brakes can be accomplished on the ground only.

Broken Cable Detector

The broken cable detector is at the input quadrant to the flap drive gearbox on the cable from the flap lever. Should the cable break, the detector would trigger the solenoid-operated shutoff valve, cutting the pressure off from both the No. 2 and No. 3 systems, stopping the flaps and preventing controllable flap operation. In this case the asymmetry brakes would not be triggered.

Flap Asymmetry Test Panel and Lights

In the APU compartment is a test panel whereby the asymmetry system can be tested for malfunctions. It is also used when resetting the system after an asymmetry condition has existed. Two lights on the annunciator panel at the pilots' station warn of an actual asymmetry condition and if there is a detector out or an electrical malfunction.

NOTE: Operation of the TEST switch with the DEFEAT switch in the NORM position will result in tripping of the torque tube brakes and closing of the shutoff valve, and will require manual resetting of the flap asymmetry system.

Flap System Failure

Flap system malfunction can result from loss of electrical power, loss of hydraulic power, or asymmetrical operation.

Loss of electrical power to the flap asymmetry detection system will be indicated by illumination of the FLAP ASYM DET light on the annunciator panel. The flaps will continue to operate after illumination of the FLAP ASYM DET light, but without protection against an asymmetrical condition.

Resetting Wing Flap Asymmetry System

NOTE: Placing the power select switch to OFF prior to shutdown of the APU will prevent tripping the wing flaps asymmetry system. If tripping should

occur, it will be necessary to reset the system in accordance with the procedures listed below.

If tripping of the wing flap asymmetry system occurs, reset the system as follows:

1. Close Manual Shutoff Valve.

2. Position the DEFEAT switch (in the APU compartment) to DEFEAT.

3. Manually reset both flap drive assymmetry brakes in the wings.

4. Manually reset the hydraulic shutoff valve at the drive gearbox. Then reset the computer amplifier from the wing flap asymmetry test panel by assuring the TEST switch is in NORM and holding the RESET switch in RESET.

5. The flaps asymmetry detection system is restored to normal by releasing the RESET switch and placing the DEFEAT switch to NORM.

6. Open Manual Shutoff Valve.

Chapter 7

WING SPOILER SYSTEM

General

The spoilers are used to reduce speed, shorten landing ground roll and increase rate of descent.

There are thirty-six spoiler panels on the wings; eighteen upper and eighteen lower. There are five upper and five lower panels on the inboard wing section of each wing, and four upper and four lower panels on the outboard wing section of each wing.

All spoilers are extended at the same rate and at the same time to produce aerodynamic drag and reduce wing lift.

Spoilers are operated by hydraulic systems No. 2 and No. 3 through a dual-power control assembly, located on the rear wing beam where the trailing edge starts to sweep back. Each dual-power control assembly has two actuators connected to push-pull rods for inboard and outboard spoiler operation. Each spoiler panel is individually connected to the pushpull rods by cable and quadrant assemblies.

Control of the spoilers is manual, with an asymmetry system to prevent uneven operation during initial extension.

Spoiler Deployment Limits

Spoiler panel deflections are limited in the extreme open and closed positions by mechanical stops in both ends of the inboard and outboard cylinders. On the ground, the upper panels open to 90 degrees and the lower panels to 86 degrees. In flight, the upper panels open to 27 degrees and the lower panels to 59 degrees.

Spoiler Indicators

One indicator with dual pointers and a flag is installed on the pilots' center instrument panel. The pointers are marked L and R, and the dial face is marked CLOSED and GRD. The flag is marked LOCKED and UNLKD.

A 2-SPOILER INOP and a 3-SPOILER INOP light on the annunciator panel indicate the condition of the system.

Spoiler Control Lever

The spoiler control lever is located on the control pedestal between the flap lever and the pilots' throttles. It is connected to the spoiler cable servo by push rods. The control lever has three detents: CLOSED, FLIGHT LIMIT, and GROUND. Spoiler RESET position is forward of and spring loaded to the CLOSED position.

Change 1 - 2 Mar 81
Change 2 - 18 May 81

To prevent inadvertent operation of spoilers while flaps are extended, a lock-out solenoid controlled by the flap-up limit switch adds approximately 50 pounds force to the spoiler lever when the flaps are out of the full up position.

Movement of the spoiler control lever out of the CLOSED position starts hydraulic system No. 3 pumps, when hydraulic system No. 3 is not pressurized and the pumps are not operating.

Spoiler Cable Servo

The spoiler cable servo is located under the control pedestal and is used for smooth operation and to reduce pilot effort for spoiler control. Movement of the spoiler control lever positions the control valves, allowing hydraulic systems No. 2 and No. 3 pressure to drive a single-loop cable run, which positions the selector valves in the dual-power control assemblies for spoiler operation.

Spoiler Dual-Power Control Assemblies

The dual-power control assemblies are located on the rear wing beam at the junction of inboard and outboard spoiler panels. Each assembly contains two dual-tandem actuating cylinders, main and auxiliary, which operate inboard and outboard push-pull rods.

In flight, with the landing gear control lever in the GEAR RETRACTED position, both hydraulic systems No. 2 and No. 3 drive all spoiler panels open or closed

With the landing gear control lever in the GEAR EXTENDED position, hydraulic system No. 2 pressure drives the inboard spoiler panels, while hydraulic system No. 3 pressure drives the outboard spoiler panels.

In the event either hydraulic system fails, both inboard and outboard spoiler panels will automatically operate from the remaining hydraulic system at a reduced rate of speed.

Blow Down System

Relief valves in the spoiler system prevent structural damage when excessive airloads occur on spoiler surfaces. Blow-down range is between 250 and 350 KCAS. Maximum airspeed operation is 350 KCAS or 0.75 Mach.

Spoiler Asymmetry Lights

The 2 SPOILER INOP and 3 SPOILER INOP lights are located on the annunciator panel. The lights illuminate when the solenoid operated asymmetry pilot valves are deenergized by either the asymmetry detectors, the EMER RETRACT switch, or the EMER OFF switch.

Illumination of only one light indicates that an electrical malfunction has occurred in the hydraulic system asymmetry control circuit. The spoilers will

remain fully operational with one light illuminated.

Both lights illuminated indicate that an asymmetric condition has occurred, and hydraulic pressure has been routed to close the spoilers. Placing the spoiler lever to RESET extinguishes the lights if they have illuminated as a result of an asymmetric condition.

Emergency Retract, Emergency Off Switch

A three-position EMER RETRACT, NORM, EMER OFF switch on the control pedestal can be used to retract the spoilers if they cannot be retracted with the spoiler lever.

The EMER RETRACT is a spring-loaded momentary position and simulates an asymmetrical condition which deenergizes the solenoid operated asymmetry pilot valves on the No. 2 and No. 3 hydraulic systems to retract the spoilers. The SPOILER INOP lights will illuminate and all modes of operation will be inoperative until the spoiler lever is moved to the RESET position.

The EMER OFF position is a lever-locked position, and with the spoilers closed, will prevent deployment of the spoilers, either manually or automatically. Hydraulic systems No. 2 and No. 3 are shut off at the spoiler actuators through the inlet shutoff and bypass valves. The 2 SPOILER INOP and 3 SPOILER INOP lights also illuminate. If the spoilers are deployed when the switch is placed in this position, only No. 2 hydraulic system power is shut off at the spoiler actuators. No. 3 hydraulic system remains ON to close the spoilers. When the spoilers close, the No. 3 system is automatically shut off. If the spoilers move from the closed position, No. 3 system is again automatically energized to close them. If system No. 3 control switches are in the OFF position, the pumps will stop when the spoiler lever is returned to the CLOSED position.

In the NORM position, normal spoiler circuitry is restored, and the spoilers may be operated after resetting.

Asymmetry Test Panel

This panel on the copilot's side console is used to test the circuit and lights without triggering the asymmetry system.

Under Spoiler Speed Light

A spoiler UNDER SPLR SPEED warning light on the annunciator panel will illuminate, and an intermittent warning note will sound on the under spoiler speed audible warning system through the headsets, under the following conditions:

(1) Aircraft in flight.
(2) Lifting the spoiler lever to ARM or out of CLOSED position.
(3) A stall signal present in the stall prevention system circuits.

Loss of Electrical Power

Spoilers are inoperative with loss of main DC electrical power.

Chapter 8

PITCH TRIM SYSTEM

The horizontal stabilizer is the pitch trim control surface. Pitch trim is accomplished by moving the stabilizer to change the angle of attack. The pitch trim supplements elevator control but is completely independent of elevator control movement.

Maximum trim limits are 4 degrees, aircraft nose down; 8 degrees, aircraft nose up. On "B" model aircraft, maximum trim limits are 9.6 degrees, aircraft nose up, when flaps are out of up position. The system has two modes of operation, and three modes of control.

The pitch trim system uses a jackscrew and nut arrangement as its two modes of operation. The jackscrew is driven by an ELECTRIC MOTOR and produces slow changes in pitch trim. The nut is driven by a HYDRAULIC MOTOR, powered by hydraulic system No. 2, and causes trim changes about five times as fast as the electric mode.

Position Indicator and Transmitter

The position indicator is located on the pilots' center instrument panel, and is calibrated in degrees of stabilizer travel for aircraft nose up and nose down. The position transmitter is mounted on the limit switch bracket assembly and is mechanically linked to the limit switch cam by a positioning arm and linkage rod.

Controls

There are three pitch trim control sets. One set is electric switches on the outboard grip of each aileron control wheel for electro-hydraulic control. A lever on each side of the lower control pedestal is for mechanical hydraulic control; and one set of electrical switches on the control pedestal is for electrical pitch trim control.

Electro-Hydraulic Pitch Trim Switch

Two electro-hydraulic pitch trim switches, located on the outboard grips of the aileron control wheels, operate a control solenoid, routing hydraulic pressure to drive the nut on the jackscrew. The switches are recessed to provide a guard against inadvertent operation of the switches.

These dual switches must be operated simultaneously to provide both power and ground for one solenoid of an electro-hydraulic pitch trim control valve. This valve ports hydraulic pressure to the appropriate side of the pitch trim hydraulic motor. The circuitry is designed so that opposing signals from pilot and copilot cancel each other.

To initiate electro-hydraulic actuation of pitch trim, the dual switches are pushed up with the thumb for nose-down trim and pulled down for nose-up trim. The switches are spring-loaded to a center (OFF) position.

Pitch trim rate, when the system is actuated by these switches, is 0.4 degrees per second. Switch operation automatically disengages the autopilot, if it is operating when the trim change is made, requiring the autopilot to be reset. Nose-up trim is interrupted if a stall signal is present in the stall prevention system.

Hydraulic Pitch Trim Lever

A hydraulic pitch trim lever is located on each side of the control pedestal just below and outboard of each set of throttle levers. A flow control valve operated by a mechanical cable system from these control levers initiates hydraulic operation. This provides a maximum trim rate of 0.4 degrees per second of stabilizer travel. Hydraulic power is provided only when the electrical switches, incorporated on the trim levers, are actuated.

Depressing the lever switches, or a main DC power failure, allows the valve to open, and permits hydraulic operation of the system by the levers. When the autopilot pitch axis is engaged, movement of the hydraulic pitch trim lever will disengage the autopilot, requiring the autopilot to be reset.

Electrical Pitch Trim Switches

Two electrical pitch trim switches are located on a panel under the center portion of the throttle quadrant on the control pedestal. The dual switches must be operated simultaneously to provide both power and ground to one clutch in the trim power unit.

For electrical actuation of pitch trim, both switches are moved up for nose-down trim or down for nose-up trim. The switches are spring-loaded to a center (OFF) position.

Pitch trim rate, when the system is actuated by these switches, is 0.08 degrees per second. If the autopilot pitch axis is engaged, the switches are inoperative, and the autopilot must be disengaged to operate the electrical pitch trim system.

Electrical Pitch Trim Disconnect Buttons

A TRIM DISC button on each aileron control wheel provides disconnect, through relays, of electrical and electro-hydraulic pitch trim in the event of a runway trim condition.

Pressing the button disconnects power from the elctrical pitch trim motor and the magnetic clutches, and disconnects power from the electro-hydraulic pitch trim control valve.

Hydraulic pitch trim will still be available through use of the hydraulic pitch trim levers.

Electrical and Electro-Hydraulic Pitch Trim Reset Switch

A TRIM RESET switch will restore power to either the electrical or the electro-hydraulic pitch trim system after the TRIM DISC button has been depressed. The switch has three positions: ELEC, ELEC HYD, and an unmarked, spring-loaded center OFF position.

The switch is held momentarily in the ELEC position to restore electric pitch trim after a disconnect of electric pitch trim. The switch is held momentarily in the ELEC HYD position to restore electro-hydraulic pitch trim after a disconnect of the electro-hydraulic pitch trim.

If the pitch trim system has been disconnected through use of the TRIM DISC button, resetting of only one mode will not restore operation of the other mode. Both modes, ELEC and ELEC HYD, must be reset to restore both modes of operation.

Chapter 9

FLIGHT CONTROL SYSTEMS

The aircraft is controlled by hydraulically powered aileron, rudder, and elevator systems. Aerodynamic lateral control is available through a cable-controlled aileron tab, if normal hydraulic pressure is lost. Electrically operated trim systems are provided for trimming the aircraft about the roll, yaw, and pitch axis. A manually operated, hydraulically powered trim system and an electrically operated, hydraulically powered trim system are also provided for the pitch axis.

Jammed Flight Controls

The aileron or elevator control interconnects between the cable tension regulators have one shear rivet, and the artificial feel springs have one shear rivet. The rudder artificial feel spring also has one shear rivet. All of these shear rivets are designed to shear at a pilot force above the maximum control operation forces and below forces that the control systems were structurally designed to withstand.

Aileron Control System

Each aileron is normally actuated by a dual-power control assembly which is controlled by the pilots' control wheels and is powered by the No. 1 and No. 2 hydraulic systems. The travel limits of the ailerons are 25 degrees up and 15 degrees down from the faired positions. Components of the aileron control system are: the pilot's and copilot's control wheels, cable systems and linkages, tension regulators, an input quadrant, an autopilot servomotor, power control assemblies, aileron servotab lockout actuators, control switches, and warning lights on the pilots' overhead panel and on the annunciator panel.

Dual-Power Control Assembly

The power control assemblies hydraulically actuate the ailerons in response to input control movements f om either pilot's control wheel, the autopilot servomotor, or the aileron electric trim actuator. In each power control assembly, one of the dual actuators is powered by the No. 1 hydraulic system, and the other actuator is powered by the No. 2 hydraulic system. During normal operation, each actuator provides one half of the force required to operate the attached aileron; however, either actuator is capable of providing the entire operating force if the hydraulic system to the other actuator fails.

The left and right aileron power control assemblies move simultaneously but in opposite directions. If one aileron becomes inoperable, the SYS 1 and SYS 2 control switches for that aileron can be placed in the tab operable positions. This isolates hydraulic pressure from the power control assembly actuating cylinders of the inoperable aileron; the operable aileron can then function normally.

A controlled leakage arrangement at each hydraulic system section of the servo valve permits approximately one gallon per minute flow of fluid through the valve when the valve is in the neutral position and the hydraulic systems are pressurized. This provides a continuous supply of warm fluid to the actuators, located in an unheated area of the aircraft. This prevents sluggish operation of the power control assembly. A power control assembly is mounted on the aft side of the rear beam in each wing, forward of the aileron.

Pilot's and Copilot's Control Wheels

The U-shaped control wheels which control operation of the ailerons and servo-tabs are individually connected by concealed cables to a separate tension regulator input quadrant beneath the flight deck. The pilot's and copilot's input quadrants are interconnected by a pushrod and cranks on the quadrants. This interconnection causes the control wheels and dual control cable systems to operate in unison. It allows operation of both control cable systems with either of the control wheels, and also permits the pilots to combine their efforts during manual operation of the ailerons.

Aileron Power Control Switches

Four three-position (NORMAL - OFF - TAB OPERABLE), lever-lock type aileron switches, on the pilots' forward overhead panel, control the motor-operated shut-off and bypass valves of the power control assemblies and select tab operation.

The NORMAL position of each switch causes the related system No. 1 or No. 2 shutoff and bypass valve of the corresponding power control assembly to open and port fluid to the servo flow control valve.

The OFF position closes the valve, discontinuing the supply of hydraulic pressure to the servo flow control valve. The OFF position also opens the shutoff valve bypass to connect the two ends of the actuator to each other and to the return line. This action permits the actuating piston to move freely with aileron surface movement.

The TAB OPERABLE position of each switch performs the same function as the OFF position, as far as the power control assemblies are concerned. When TAB OPERABLE is selected with either the two left or the two right aileron power control switches, the corresponding aileron tab becomes operable. Placing either the two left, the two right, or all four power control switches to TAB OPERABLE, energizes the pumps of hydraulic system No. 3. This energizes the corresponding solenoid operated tab lock valve, opening the valve to port system No. 3 pressure to the related tab lockout actuator. Actuator movement adjusts the tab input linkage, with the result that control wheel movement can be transmitted to the tab.

Aileron System Power Off Lights

Two 28-volt DC POWER OFF lights for the left aileron power control assembly and two for the right aileron power control assembly are located on the pilots'

overhead panel, above the aileron power control switches. The lights illuminate if the respective system pressure drops to approximately 1500 psi, within the related power control assembly. A pressure switch downstream of each aileron system shutoff valve controls the associated light.

Aileron System 1 Power and Aileron System 2 Power Lights

An AILERON SYS 1 PWR and an AILERON SYS 2 PWR light on the annunciator panel illuminate if the respective hydraulic system pressure drops to approximately 1500 psi within at least one of the power control assemblies. The POWER OFF lights on the pilots' overhead panel indicate which control assembly has suffered a loss of hydraulic pressure. The AILERON SYS 1 PWR and AILERON SYS 2 PWR light will remain illuminated for as long as the system pressure within either power control assembly is below 1500 psi. Subsequent power failure of the system in the remaining power assembly will be visually evidenced only by the related POWER OFF light. The AILERON SYS 1 PWR and AILERON SYS 2 PWR lights are controlled by the pressure switches which control the related POWER OFF lights.

Aileron Tab Operable Lights

Two 28-volt DC lights, an R AIL TAB OPER and an L AIL TAB OPER light, are provided on the annunciator panel to give positive indication when the corresponding aileron tab linkage is in the operable configuration. A limit switch, actuated by movement of the related tab linkage lockout actuator, controls the associated light.

Normal System Operation

During normal operation, the LEFT and RIGHT AILERON SYS 1 and SYS 2 control switches on the pilots' overhead panel are in the NORMAL positions. The position of the ailerons is controlled by the pilot's or copilot's control wheel or by pilot or copilot inputs to the aileron trim system. Movement of the control wheels is transmitted aft by dual cable and linkage systems to a common input quadrant assembly mounted on the aft side of the center wing rear beam. The input quadrant assembly can also receive input motions from an aileron electric trim actuator and an autopilot servomotor. A spring cartridge attached to the input quadrant "feeds back" an artificial "feel" resisting force to the control wheels to simulate the "feel" of the aerodynamic loads that resist the movement of the ailerons. Without this "feel" the pilots have no way to gage the amount of control surface loading during normal powered operation. During normal flight operation, the aileron servotabs are locked so they move and remain faired with the ailerons.

Operation With One Hydraulic System

If either the No. 1 or No. 2 hydraulic system is inoperable, the LEFT and RIGHT AILERON SYS control switches for the inoperable hydraulic system are placed in the TAB OPERABLE positions to actuate the shutoff and bypass valves in the power control assemblies. The ailerons can then be controlled in the same manner used for normal operation with the system that is still functioning.

Aileron Tab Lockout Actuator

When the LEFT and RIGHT AILERON SYS 1 and 2 control switches on the pilots' overhead panel are in the NORMAL positions, the servotabs remain faired with the ailerons during normal operation of the ailerons. When the No. 1 and No. 2 hydraulic systems are depressurized and the power control assemblies are inoperable, the LEFT and RIGHT AILERON SYS 1 and 2 control switches are placed in the TAB OPERABLE positions. This will start the No. 3 hydraulic system pumps and also open a solenoid valve in each wing to admit No. 3 hydraulic system pressure to the aileron tab lockout actuators.

Aileron Trim System

The aileron trim system allows the pilot to correct for a wing low or wing high condition. The trim system consists of an actuator assembly, mounted on the wing rear beam and mechanically connected to the input quadrant assembly. A position indicator is located in the pilots' center instrument panel. The aileron trim range is 9.5 degrees up and 8 degrees down.

Aileron Trim Control Switches

Two aileron trim switches on the control pedestal trim the aircraft about the roll axis. The switches are three-position (LOWER LEFT WING - LOWER RIGHT WING - OFF) toggle switches. The spring-loaded center "OFF" position is unmarked. The switches must be operated simultaneously to provide both power and ground to the 115-volt AC trim actuator. Holding the switches in either position energizes the actuator jackscrew. This mechanically positions the aileron quadrant which, in turn, mechanically positions the servo flow control valves of the power control assemblies to actuate the aileron surfaces hydraulically.

Aileron Trim Position Indicator

A 28-volt DC aileron trim position indicator is on the pilots' center instrument panel. The dial of the indicator is calibrated in graduations of 1 degree from 0 to 6 (with an unmarked calibration representing 7) degress for lower left wing and lower right wing. The aileron trim position transmitter is located on the end of the actuator assembly.

Rudder Control System

The rudder system uses pushrods, levers, and a dual cable system to transmit rudder pedal motion to a quadrant in the fuselage tail cone area. Dual pushrods transmit quadrant motion to levers mounted on the rudder yoke assembly and linkage to a servo flow control valve of a dual hydraulic power control assembly.

Linkage motion positions the servo flow control valve to actuate the rudder surface, hydraulically. Feedback linkage automatically repositions the servo flow control valve to neutral, stopping movement of the rudder surface when movement of the rudder pedals stops. Pressure from hydraulic system No. 1 and No. 2 is

normally supplied to the power control assembly. The travel limit of the rudder is 35 degrees either side of neutral.

The rudder pedals are supported by positionable arms which allow four inches forward and five inches aft adjustment. Two handcranks, one located below the pilot's instrument panel and one below the copilot's instrument panel, make this adjustment.

Rudder Power Control Switches

Two NORMAL - POWER OFF switches on the pilots' overhead panel control the supply of fluid to the power control assembly. In the event either hydraulic power system is shut off or fails, a portion of normal rudder surface deflection is lost at high airspeeds.

Rudder System Power Off Lights

Two POWER OFF Lights, one for hydraulic system No. 1 and one for hydraulic system No. 2, are located above the rudder hydraulic systems' control switches on the pilots' forward overhead panel. The lights illuminate if the respective system pressure drops to approximately 1500 psi within the power assembly. A pressure switch, installed downstream of the rudder system shutoff valve, controls the associated POWER OFF light.

Rudder System 1 Power and Rudder System 2 Power Lights

A RUDDER SYS 1 PWR light and a RUDDER SYS 2 PWR light are installed on the annunciator panel. The lights work in conjunction with the respective system POWER OFF light on the pilots' overhead panel to indicate visually low-pressure conditions in the pressure inlet lines of the power control assembly. The lights illuminate if the respective system inlet pressure drops to approximately 1500 psi. The lights are controlled by the pressure switches which control the POWER OFF lights.

Rudder System High Pressure Lights

Two HI PRESS lights, one for each half of the dual-power control assembly, on the pilots' forward overhead panel, advise that high pressure is available at the related rudder actuator. The lights are controlled by the load limiting relief pressure switch associated with rudder power system No. 1 or No. 2. The lights are normally illuminated when aircraft airspeed is below 160 (± 10) knots CAS.

Normal System Operation

The rudder is operated by hydraulic systems No. 1 and No. 2 which supply pressure to the power control assembly. Load limiting relief valves within each half of the power control assembly relieve normal (3000 psi) hydraulic pressure

to 2450 psi. This is the maximum rudder system operating pressure at airspeeds below 160 (± 10) knots CAS. At aircraft airspeeds above 160 (± 10) knots CAS, control pressure to the relief valves are released through the action of the CADC controlled, solenoid operated pilot valves to further relieve rudder system operating pressure to 900 psi, maximum. Loss of main DC power de-energizes the pilot valve solenoids, which are normally energized above 160 (± 10) knots CAS.

A bypass feature of the motor-operated shutoff valve ports return fluid directly from one side to the other side of the piston of the actuator when the valve is in the shutoff position. This permits the piston to move freely with rudder surface movement. Prior to the time the shutoff valve is closed during a hydraulic system failure, an anti-cavitation check valve within each half of the power control assembly prevents cavitation of the actuator and permits free movement of the actuating piston.

A controlled leakage arrangement at each hydraulic system section of the servo valve permits approximately one gallon per minute flow of fluid through the valve when the valve is in the neutral position and the hydraulic systems are pressurized. The system incorporates an artificial feel mechanism.

Rudder High-Pressure Override Switch

This switch, located on the pilots' overhead panel, permits selection of rudder system high-pressure if required when operating below 160 knots CAS.

Rudder System Overpressure Light

A RUDDER OVERPRESS light illuminated on the annunciator panel advises of an overpressure condition within the power control assembly. Under normal conditions the light illuminates only when aircraft airspeed is above 160 (± 10) knots CAS and high rudder system pressure is being supplied to at least one of the rudder actuators. The light is controlled by the joint action of either of the load limiting relief pressure switches and a CADC controlled 28-volt DC rudder pressure limiting relay incorporated in the system.

Rudder Trim System

The rudder trim system allows the pilot to correct for minor directional deviations. The system consists of an actuator assembly mounted to the aft fuselage structure, mechanically connected to the input quadrant assembly, and a position indicator located on the pilots' center instrument panel. The range of rudder trim is 6 degrees to either side of neutral; the rate is 1 degree per second.

Rudder Trim Position Indicator

The trim position indicating system consists of a DC synchro-type transmitter inside the trim actuator and a synchro-receiver indicator located on the pilots' center instrument panel. The dial of the indicator is calibrated in graduations of one degree from zero to seven degrees for nose left and nose right.

Rudder Trim Control Switches

Two rudder trim control switches, on the control pedestal, are three-position (NOSE LEFT - NOSE RIGHT - OFF) toggle switches, spring-loaded to the center unmarked OFF position. The switches must be operated simultaneously to provic both power and ground to the 115-volt AC trim actuator. Holding the switches in either position energizes the trim actuator, extending or retracting the actuator jackscrew to mechanically position the rudder quadrant. This, in tur mechanically positions the servo flow control valve of the power control assem to hydraulically actuate the rudder surface.

Elevator Control System

The elevators are hydraulically actuated by a power control assembly mounted between the elevator torque shafts in the bullet. During normal operation, tl actuators powered by the No. 1 and No. 2 hydraulic systems move the elevators. If either of the hydraulic systems becomes inoperable, the elevators could be controlled with the remaining system; however, the No. 3 hydraulic system and the emergency actuator can be used, with the system still operating, to provic dual hydraulic system control. If both the No. 1 and No. 2 hydraulic systems become inoperable, the elevators can be controlled with the No. 3 hydraulic system and the emergency actuator.

Elevator Control Column

During normal system operation, full control column travel, forward and aft o1 neutral, produces full elevator travel of 15 degrees down and 25 degrees up. Mechanical stops prevent movement of the control columns beyond the distances mentioned. The control columns are equipped with bob-weights which work in conjunction with the feel spring to provide control column feel for increased "Gs." A single pushrod and dual cable system for each control column transmit column motions to a quadrant assembly installed in the empennage.

Elevator Hydraulic Power Control Switches

Two three-position (NORM - OFF - EMER), lever-lock type switches on the pilots forward overhead panel control the motor-operated shut-off and bypass valves (the power control assembly. The NORM position of these switches causes the related system No. 1 or system No. 2 shutoff and bypass valve to open and port fluid to the servo flow control valve. The OFF position closes the shutoff valve, discontinuing the supply of hydraulic pressure to the servo flow contr valve. The OFF position also opens the shutoff valve bypass to connect the t ends of the actuator to each other and to the return line, permitting the act ating piston to move freely with elevator surface movement. The EMER positio performs the same function as the OFF position as far as hydraulic systems No and No. 2 are concerned. It also causes the emergency system (hydraulic syst No. 3) shutoff and bypass valve to open and port fluid to the emergency syste servo flow control valve. The emergency system shutoff and bypass valve is energized closed when both switches are in any combination of the NORM and OF positions.

Elevator System Power Off Lights

Two POWER OFF lights, one for elevator hydraulic system No. 1 and one for elevator hydraulic system No. 2, are above the elevator system hydraulic power control switches on the pilots' forward overhead panel. The lights illuminate if the respective system pressure drops to approximately 1500 psi within the power control assembly.

Elevator System 1 Power and Elevator System 2 Power Lights

An ELEV SYS 1 PWR light and an ELEV SYS 2 PWR light are on the annunciator panel. The lights illuminate if the respective system pressure drops to approximately 1500 psi within the power control assembly. The lights are controlled by the pressure switches which control the associated POWER OFF lights on the pilots' forward overhead panel.

Elevator Emergency Power On Lights

An EMER PWR ON light is provided on the pilots' forward overhead panel to give a positive indication of the adequacy of the elevator emergency system pressure, when using the emergency actuator. A dual function pressure switch controls the lights.

Elevator Emergency Power Light

An ELEV EMER PWR light is on the annunciator panel. The light illuminates if the pressure within the emergency actuator drops to approximately 1500 psi while the emergency elevator system is being used. A dual function pressure switch controls the light.

Normal Operation

During normal operation, the ELEVATOR SYS 1 and SYS 2 control switches, on the pilots' overhead panel, are in the NORM positions to connect the 28-volt isolated DC bus to the No. 1 and No. 2 hydraulic system shutoff and bypass valve motors on the elevator power control assembly. The motors drive the valves to the open positions. Also, during normal operation, the ELEVATOR ARTIFICIAL FEEL switch is in the NORM position so the artificial feel servo mechanism adjusts the amount of "feel" in the system in relation to the airspeed, air density, and air temperature variations as detected by the CADC No. 1.

The control column movements are transmitted to a common input quadrant assembly mounted in the vertical stabilizer. The input quadrant assembly can also receive input motions from a cable-connected autopilot servomotor. A spring cartridge, mechanically connected to the input quadrant assembly, "feeds back" a resisting force to the control columns to provide an artificial "feel" of the aerodynamic loads on the elevators. Moreover, the attach point of the artificial feel spring rod to the input quadrant assembly is moved and adjusted by an artificial feel servo mechanism. Without this "feel" force, the pilots have no means of gaging the amount of control surface loading. Pushrod and bellcrank linkages

transmit motion from the input quadrant to the power control assembly in the bullet between the torque tube ends of the elevators.

During normal operation, the input movements to the power control assembly displace the servo valves to connect the pressure and return lines of the No. 1 and No. 2 hydraulic systems to the opposite ends of the actuating cylinders. The direction of actuating piston movement is determined by the direction of servo control valve displacement from the neutral position. Extension and retraction of the actuator pistons are transmitted by bellcranks and pushrods to the elevator torque tubes to move the elevators.

The main servo valve has a controlled leakage arrangement which permits approximately one gallon of fluid per minute to flow through the valve when the valve is at the valve neutral position. This provides a continuous supply of warm fluid to the actuators, located in the unheated empennage, to prevent sluggish operation of the power control assembly after periods of inactivity. A piston and orifice arrangement at one end of the main servo valve provides a hydraulic snubbing and damping action to protect the valves and the system from too rapid actuation.

Partial Emergency and Emergency Operation

The elevators can be controlled with any of the three hydraulic systems energizing the power control assembly; however, usually two hydraulic systems are used in unison, to provide uninterrupted control of the elevators, if one of the operating systems should fail.

If one of these systems becomes inoperable, the corresponding ELEVATOR SYS control switch on the pilots' overhead panel is placed in the EMER position. This causes the inoperable hydraulic system shutoff and bypass valve to close, the No. 3 hydraulic system shutoff and bypass valve to open, and the No. 3 hydraulic system pumps relay to close to start the No. 3 system pumps. Thus, the emergency actuator, powered by hydraulic system No. 3, becomes operable to aid whichever system is still operating.

In case hydraulic system No. 1 or No. 2 pressure is lost to the power control assembly, place the related elevator power control switch in the EMER position. The aircraft can be safely flown as long as at least one of the elevator hydraulic power systems is functioning normally.

Elevator Artificial Feel System

The artificial feel system includes a Q spring which has an adjustable attachment point on the elevator quadrant assembly, and a motor-operated Q system actuator, also mounted on the quadrant assembly. Signals from CADC No. 1 energize the motor of the Q system actuator, sliding the point of Q-spring attachment on the quadrant to increase or decrease the feel produced by the spring in accordance with increases and decreases in aircraft airspeed. Limit switches deenergize the Q system actuator motor when the Q spring reaches the minimum Q or maximum Q position.

Minimum Q and maximum Q positions represent approximately 220 KCAS and 380 KCAS respectively.

The signals from No. 1 CADC are modified by a pitch rate adapter which obtains power from the 26-volt AC bus through a PITCH RATE ADAPT EXC circuit breaker on the emergency circuit breaker panel.

A signal comparator, which receives signals from a potentiometer in the Q system actuator and signals from CADC No. 2, compares the actual versus the desired operation of the Q system actuator. If a discrepancy exists, the comparator deenergizes the actuator, causing the Q spring to be held in the position it was in at the time the discrepancy was detected. A light on the annunciator panel illuminates when the Q system has been deactivated by the signal comparator. A switch on the pilots' forward overhead panel moves the feel spring to the LO-Q position, if desired, when the light illuminates.

Elevator Artificial Feel Selector Switch

A three-position (LO-Q - NORM - RESET), lever-lock type elevator artificial feel selector switch is located on the pilots' forward overhead panel. It can be used to obtain the LO-Q feel value of the artificial feel spring, in the event of Q system malfunction. Placing the switch to LO-Q results in the quadrant attachment point of the Q spring being driven to the LO-Q position. LO-Q position is approximately 220 KCAS. The NORM position allows the motor of the Q system actuator to be controlled by signals from the CADC in accordance with the changes in aircraft airspeed. The RESET position is effective only when the aircraft is on the ground.

Elevator Feel Malfunction Light

An ELEV FEEL MALFUNC light on the annunciator panel indicates a malfunctioned artificial feel system. Illumination of the light indicates that a discrepancy between CADC input and follow-up signals has deenergized the Q system actuator and the Q spring is being held in the last position required by the CADC prior to system malfunction. The light is controlled by a signal comparator incorporated in the system.

Wind Gust Limitations

The aircraft was designed to withstand 70-knot gusts from any direction, the tail-on gust being the most severe. Above 70 knots, control damage may occur if the aircraft is not headed into the wind, since design limits can be exceeded. The aircraft should be evacuated to a safe weather area if winds in excess of 70 knots are expected; however, if that is impossible, the aircraft will be moored in accordance with maintenance TOs. If the aircraft has been subjected to wind velocities exceeding 70 knots, thoroughly check the control surfaces and points of attachment before the next flight.

The uses of engines to maneuver the aircraft during high wind are not recommended and should be avoided except under extreme circumstances. Foreign object damage (FOD) to the engines is highly probable.

HYDRAULIC SYSTEM DISTRIBUTION

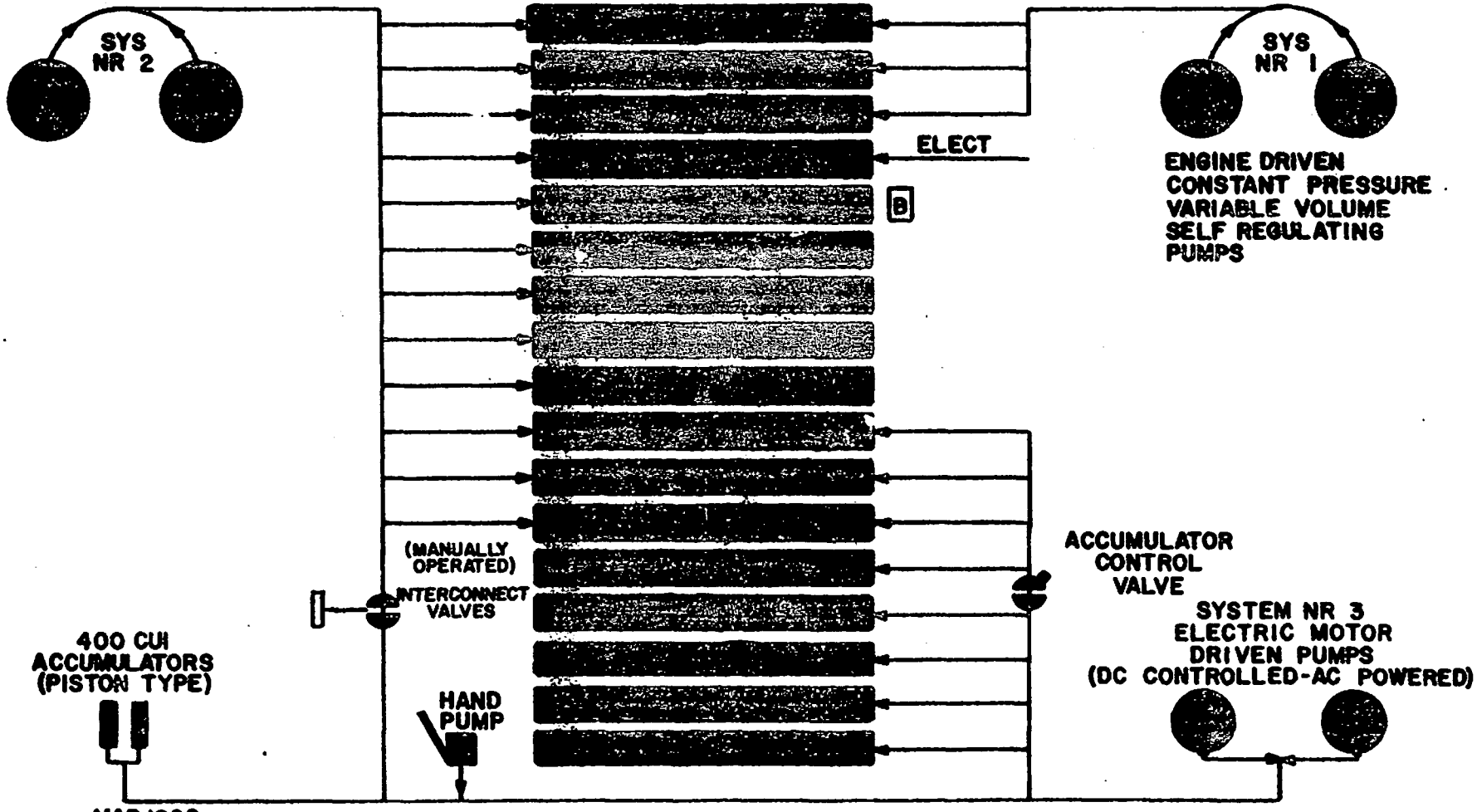

MAR 1980

FOR INSTRUCTIONAL PURPOSES ONLY

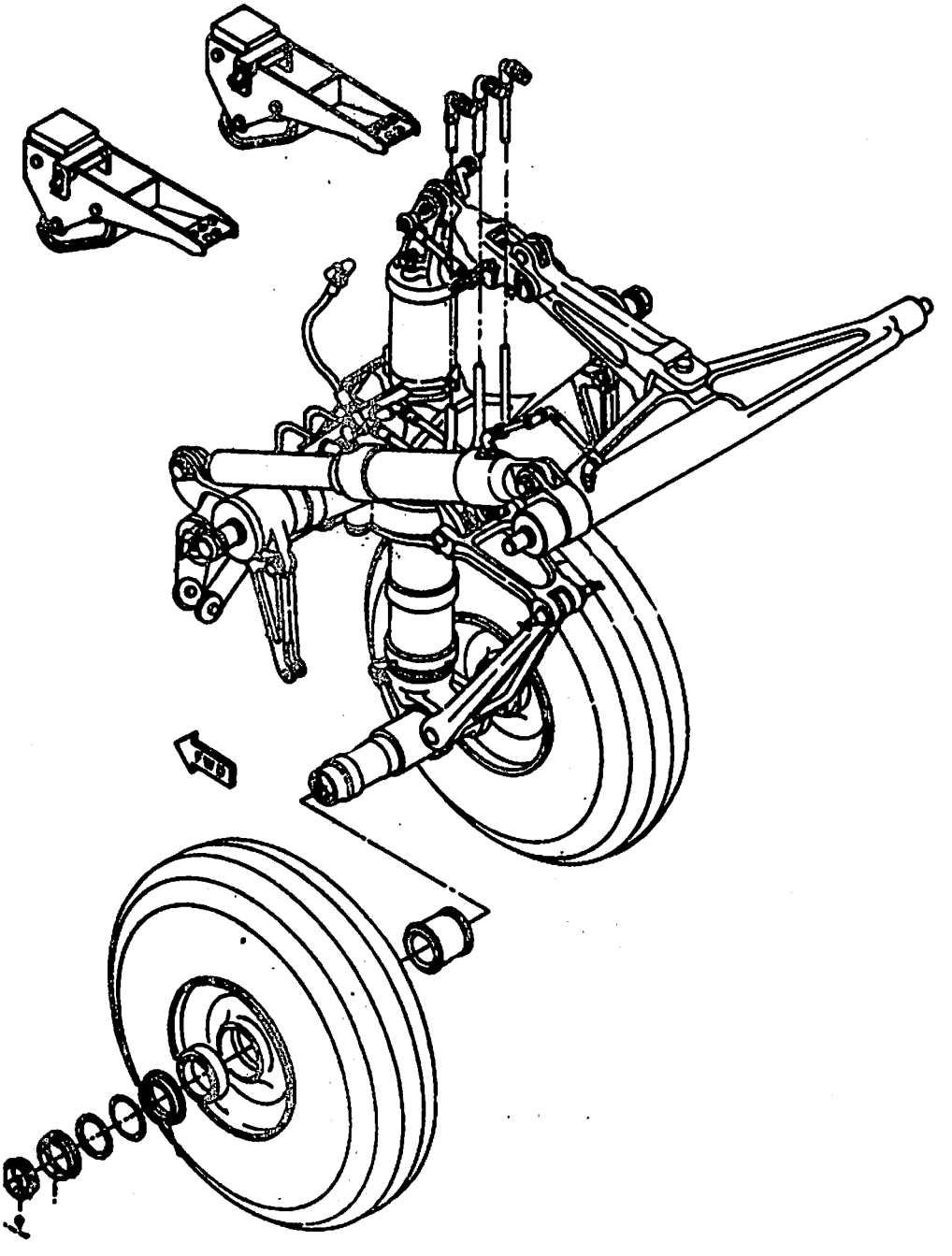

Nose Landing Gear

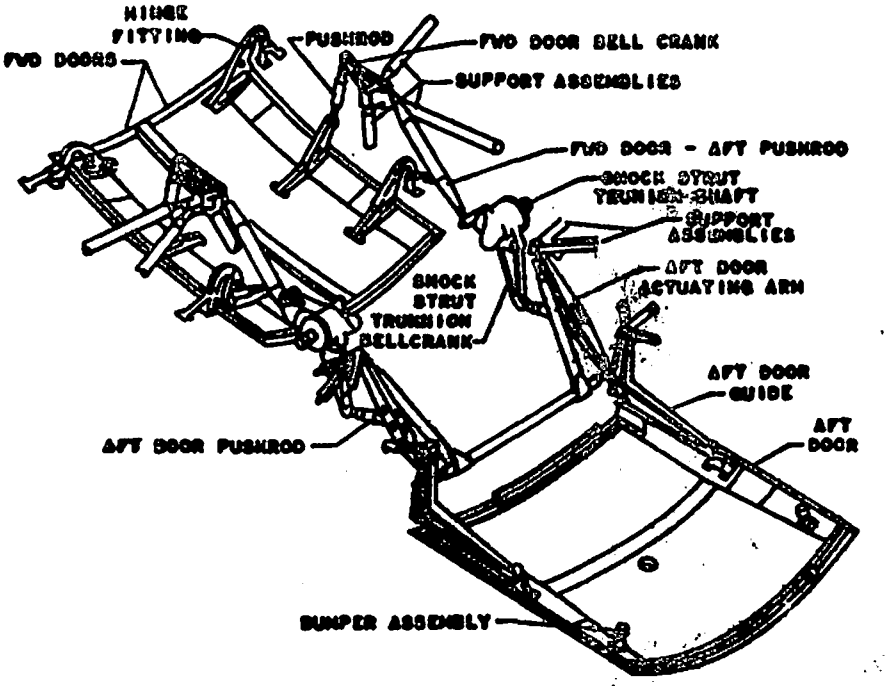

NOSE LANDING GEAR DOORS

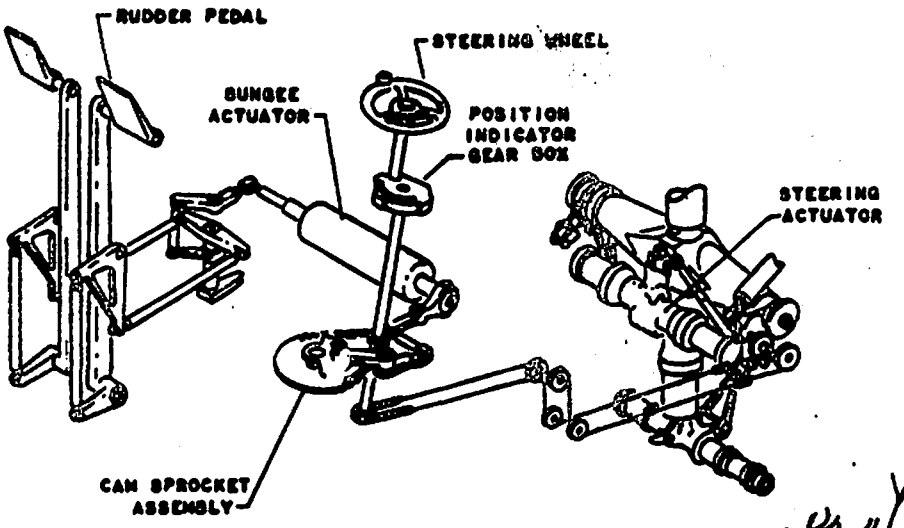

NOSE GEAR STEERING CONTROL LINKAGE

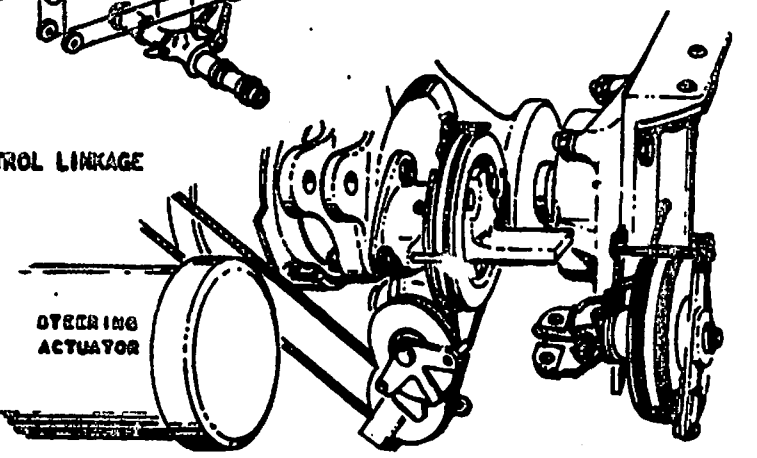

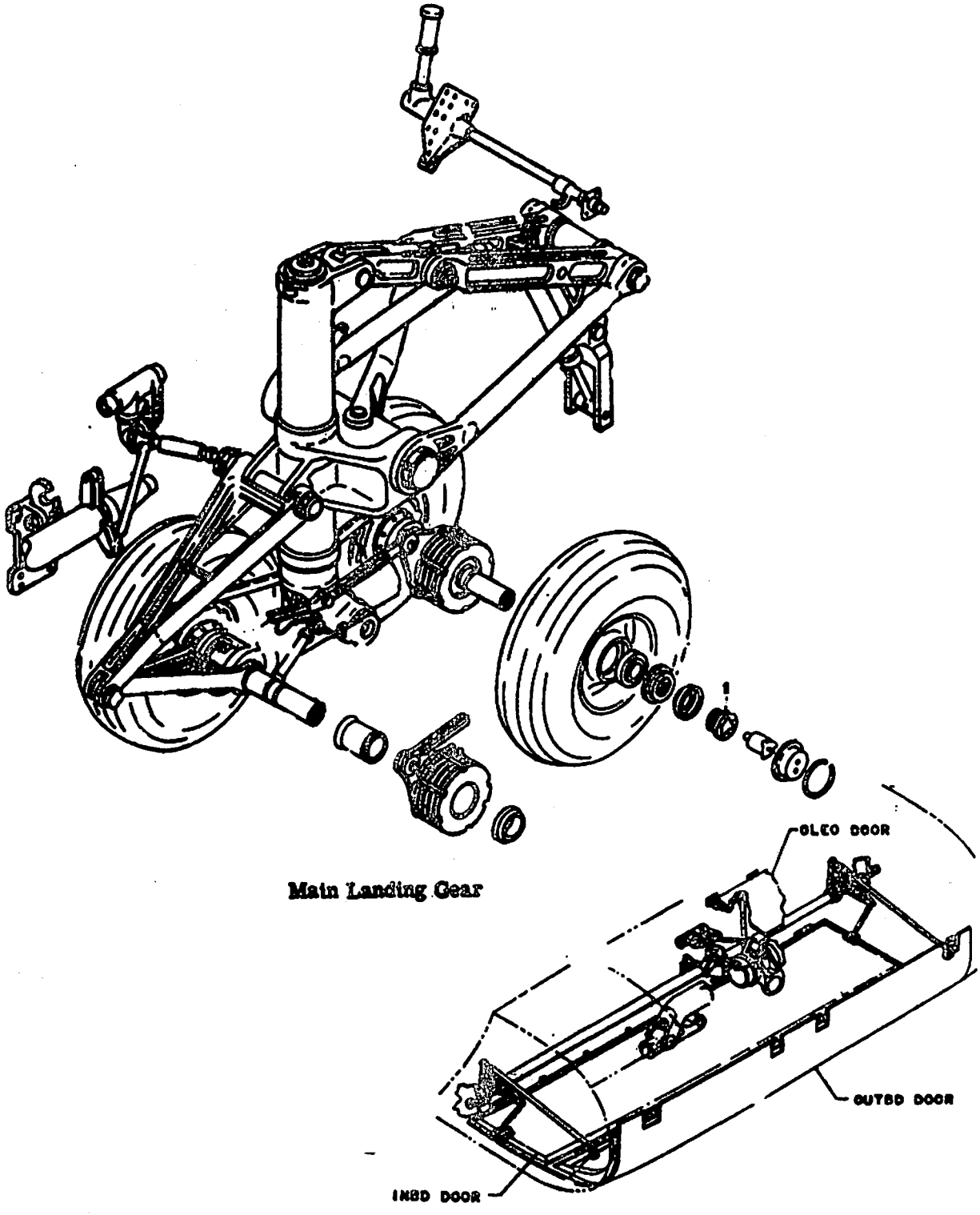

Main Landing Gear

MAIN LANDING GEAR DOORS AND UPLOCK

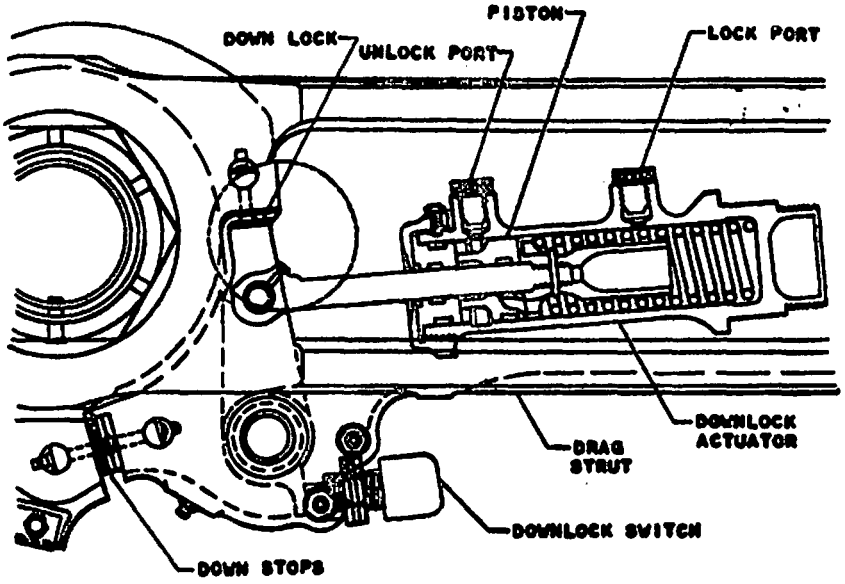

MAIN LANDING GEAR DOWNLOCK

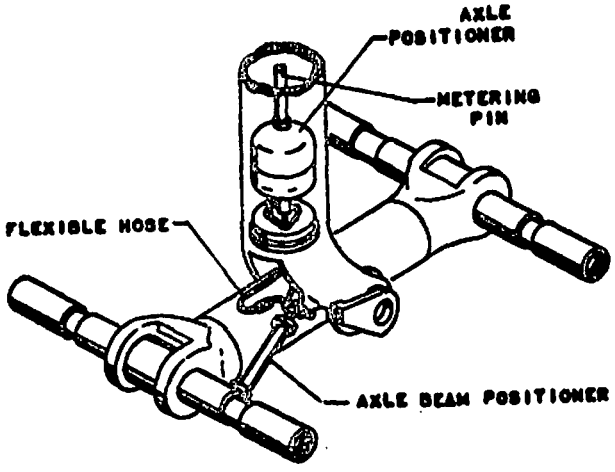

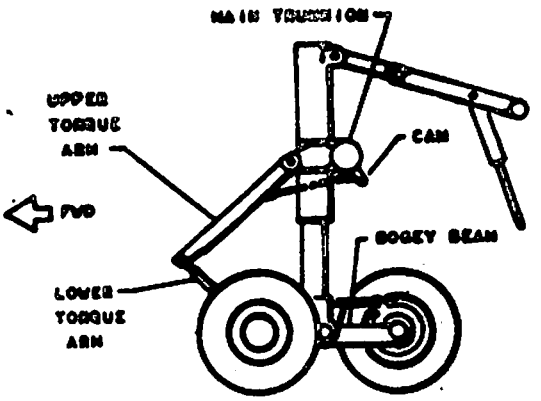

GEAR DOWN AND LOCKED

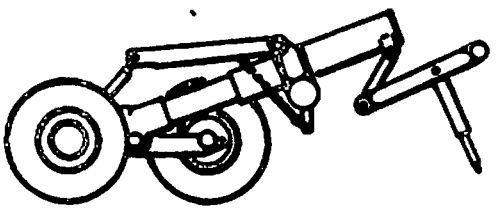

ALMOST UP, OR START OF EXTENSION

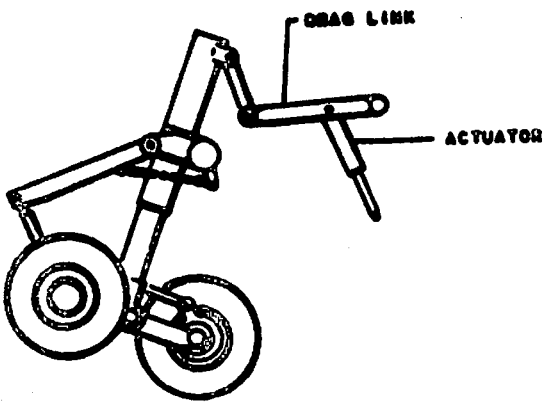

GEAR RETRACTING

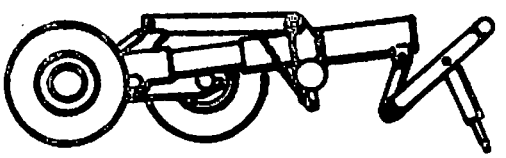

FULL UP POSITION

MAIN LANDING GEAR UPLOCK

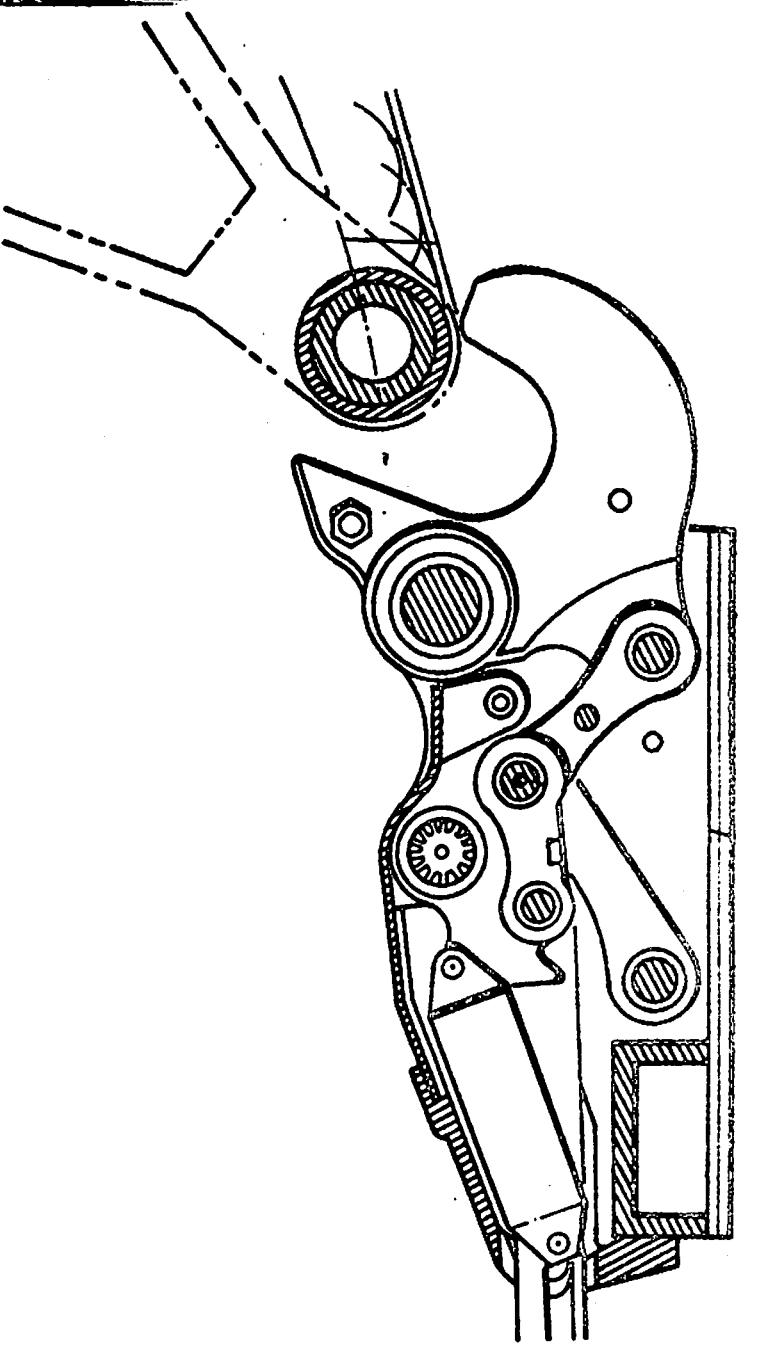

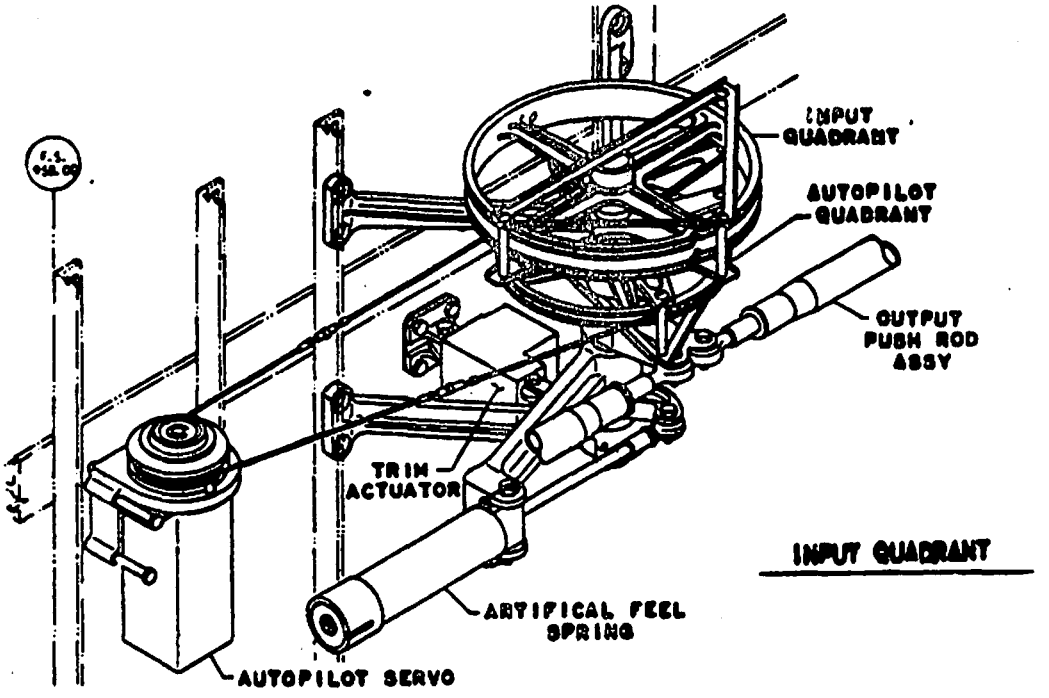

INPUT QUADRANT

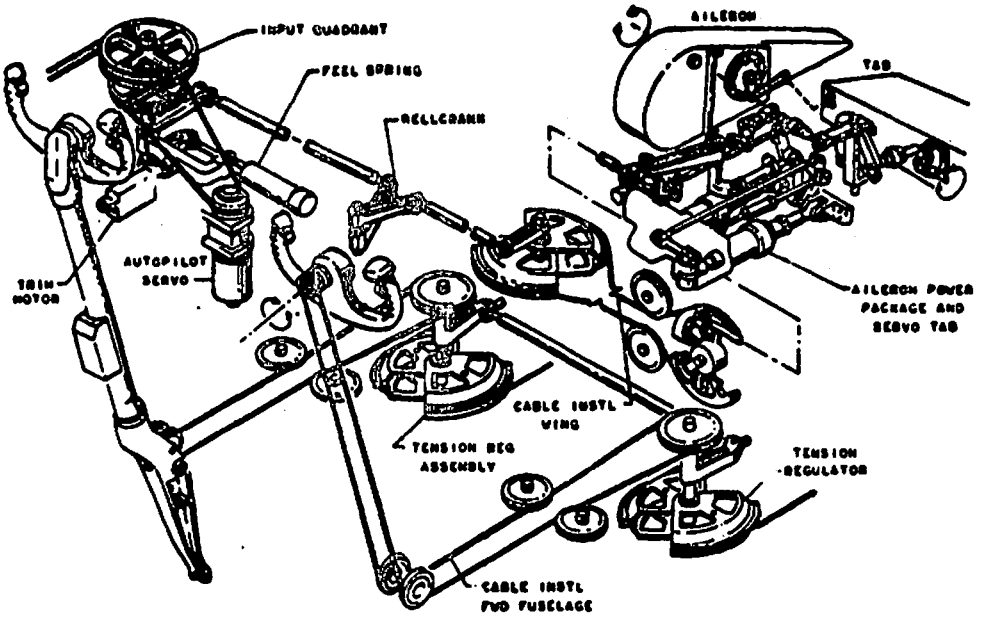

AILERON CONTROL SYSTEM

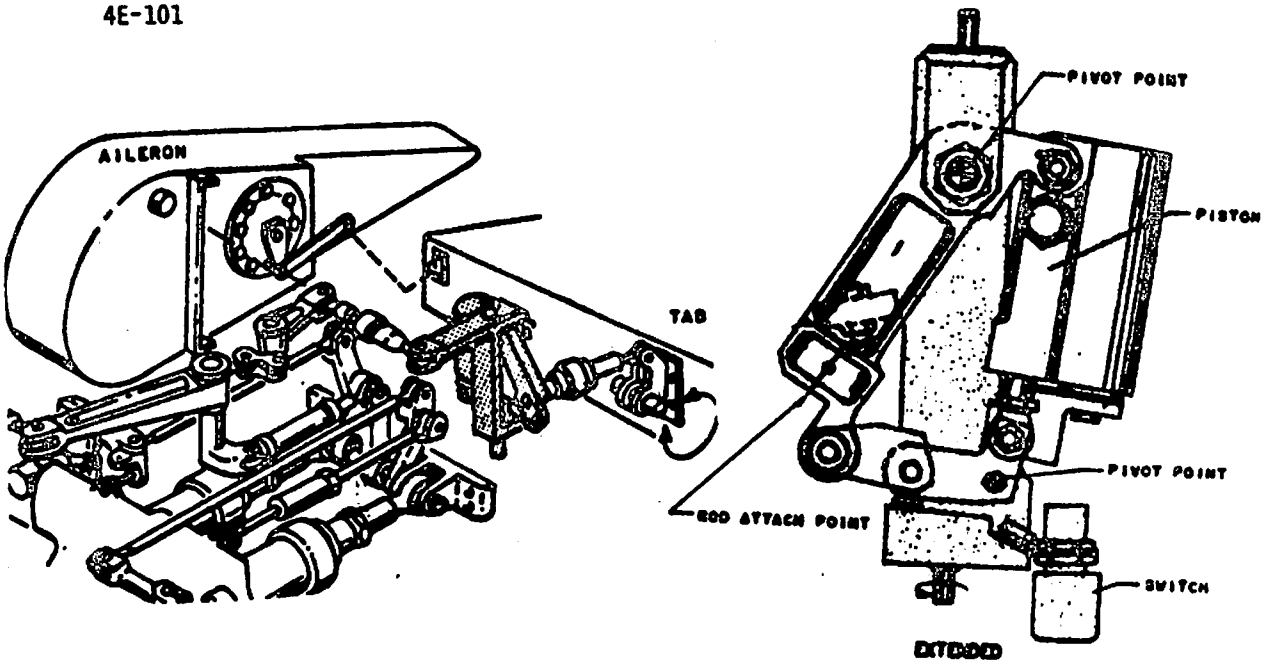

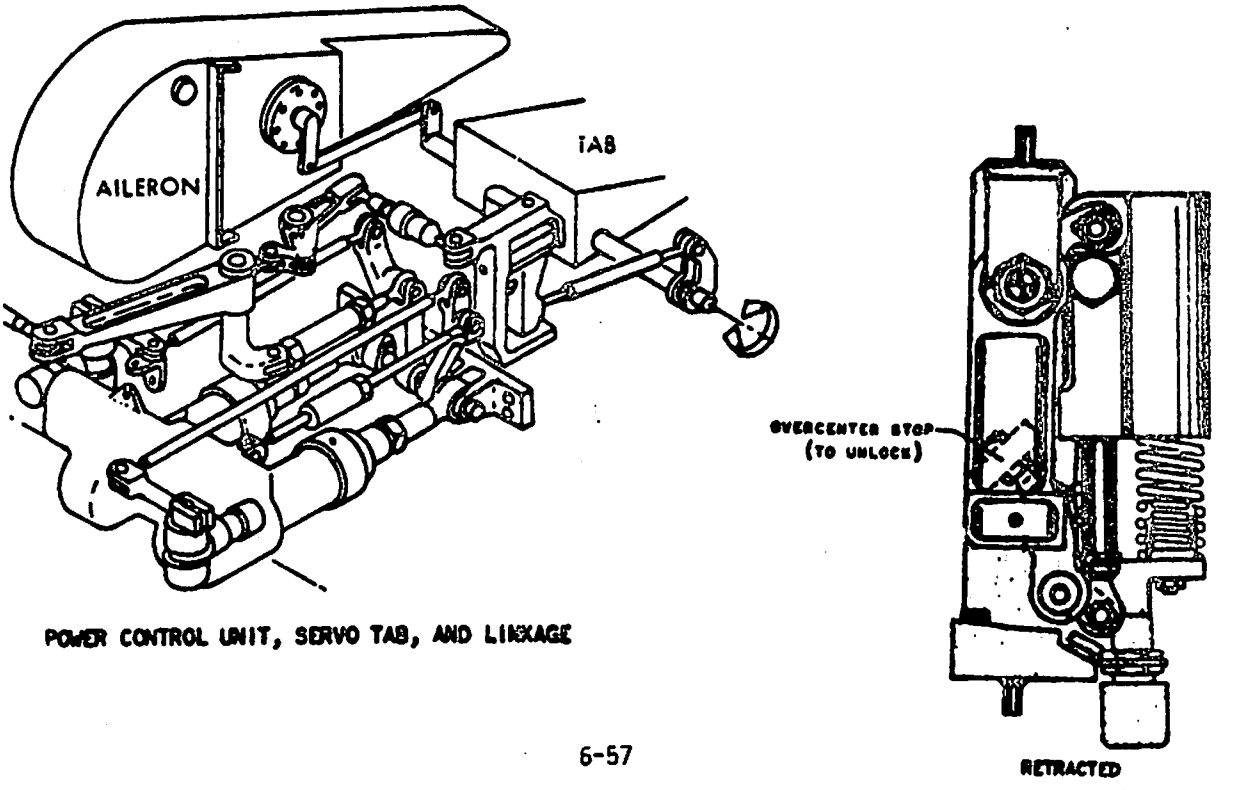

POWER CONTROL UNIT, SERVO TAB, AND LINKAGE

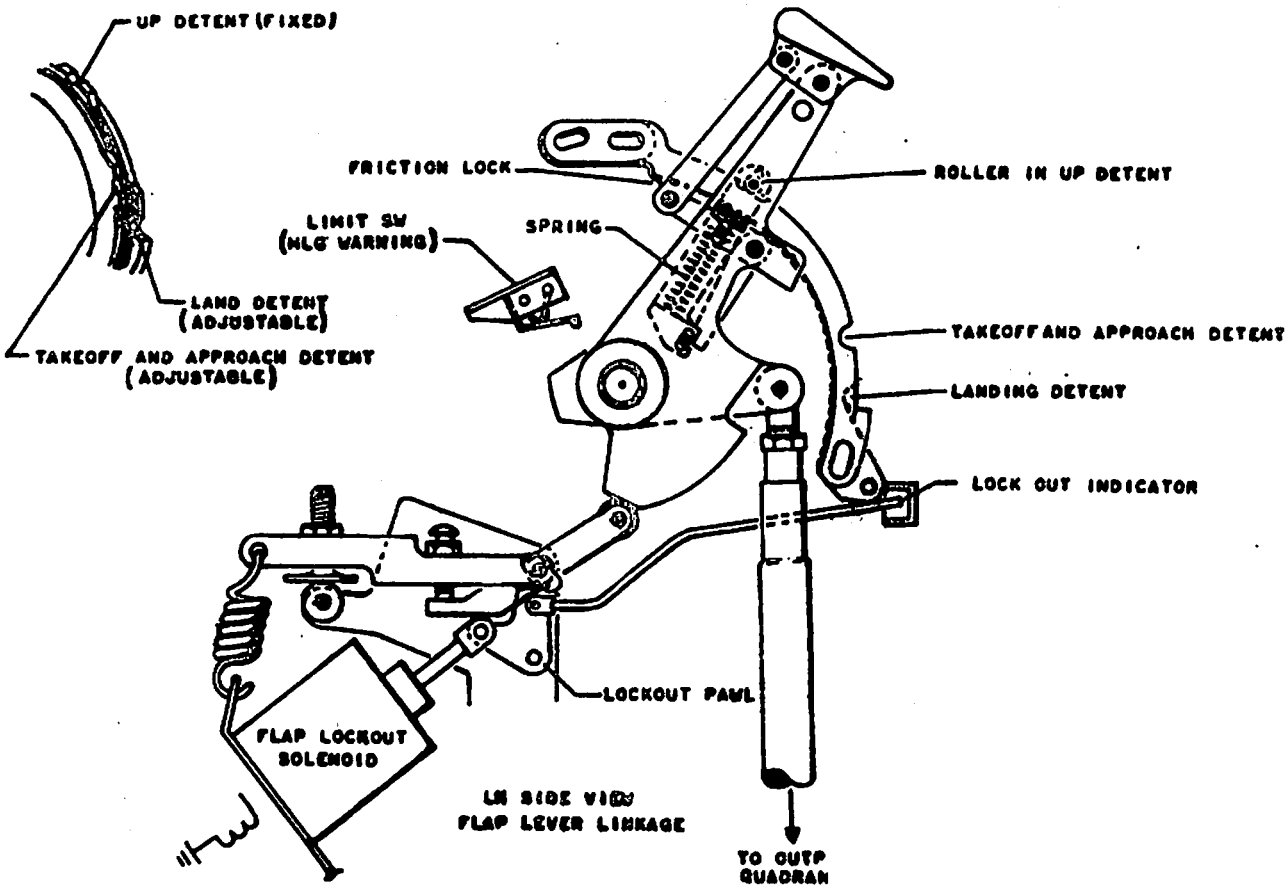

FLAP CONTROL HANDLE LINKAGE

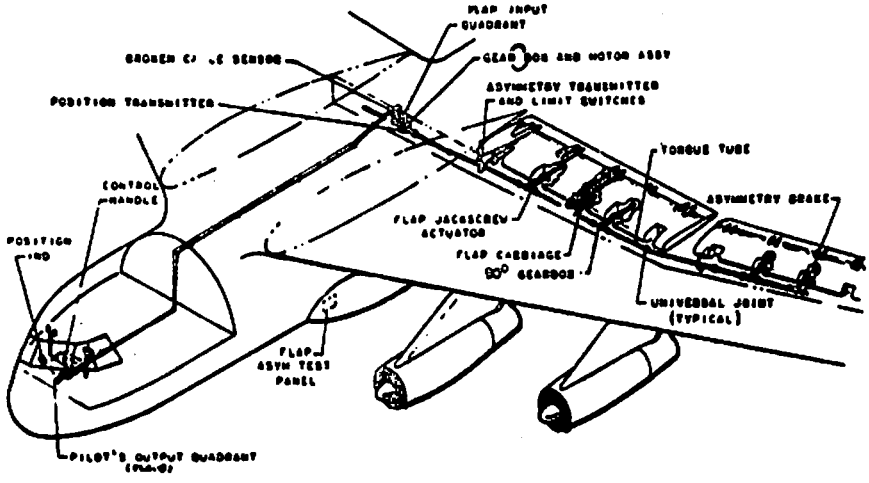

FLAP SYSTEM INSTALLATION

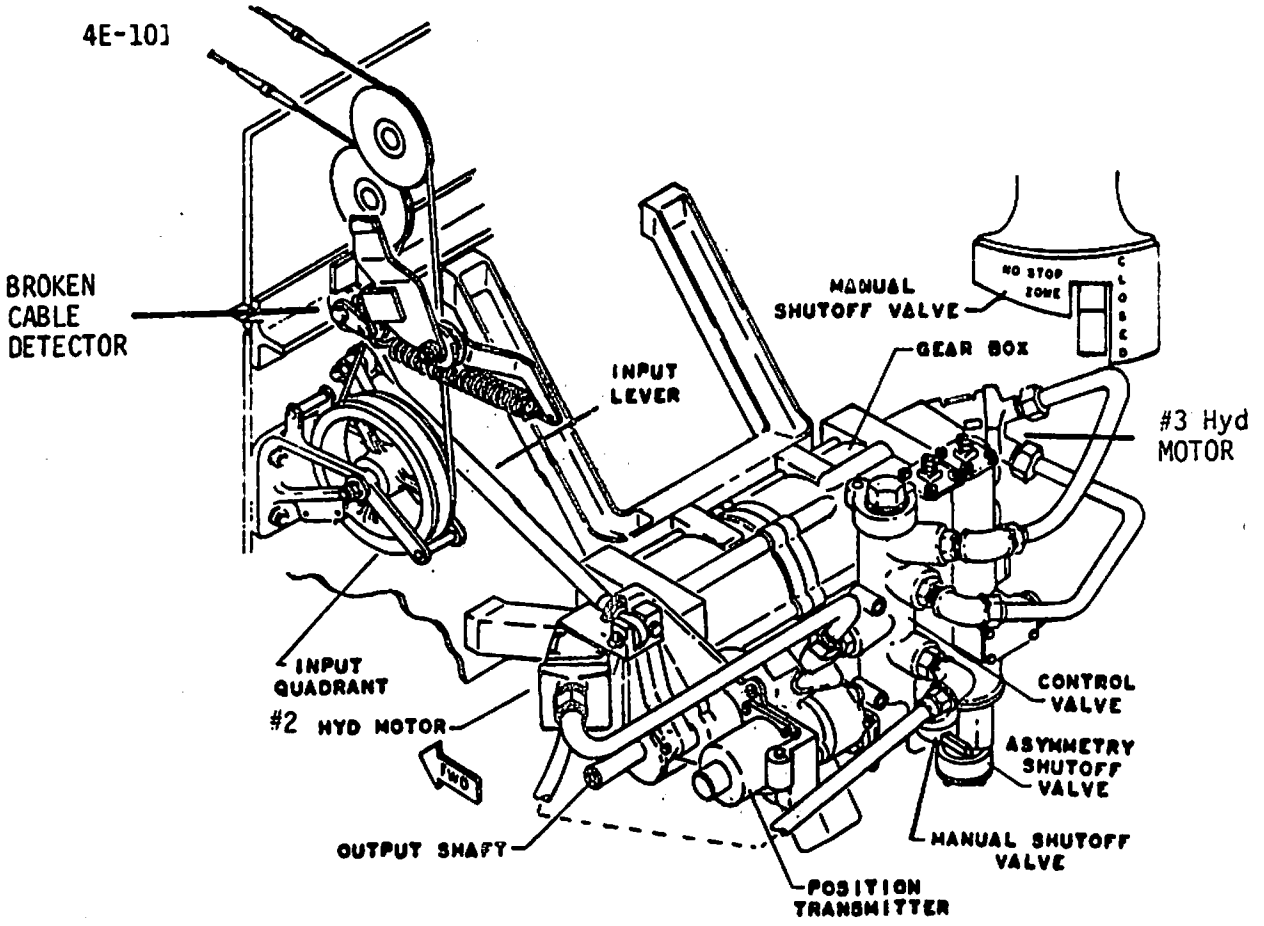

FLAP INPUT QUADRANT AND GEARBOX INSTALLATION

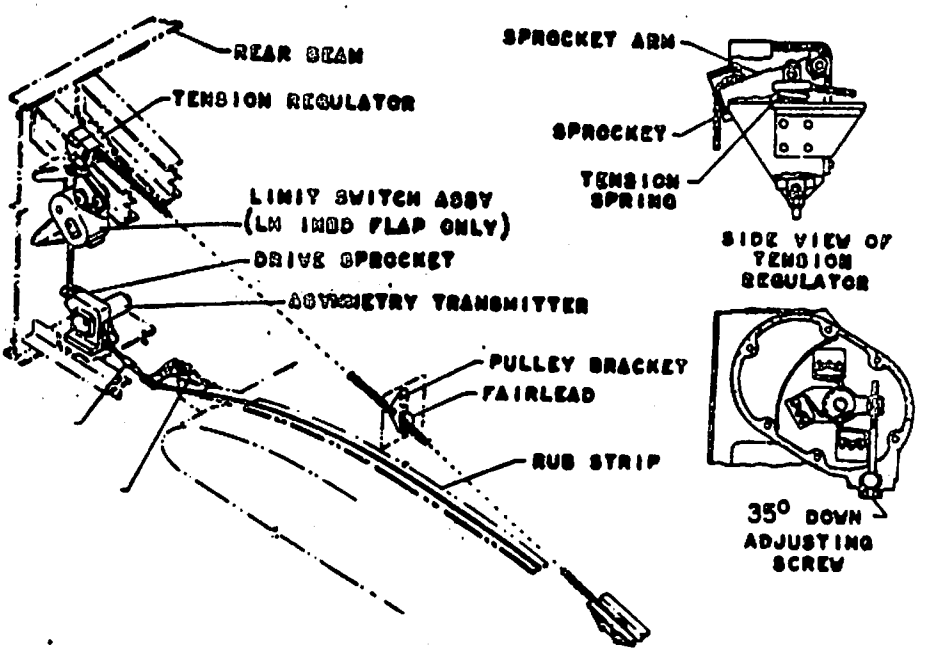

WING FLAP ASYMMETRY TRANSMITTER DRIVE

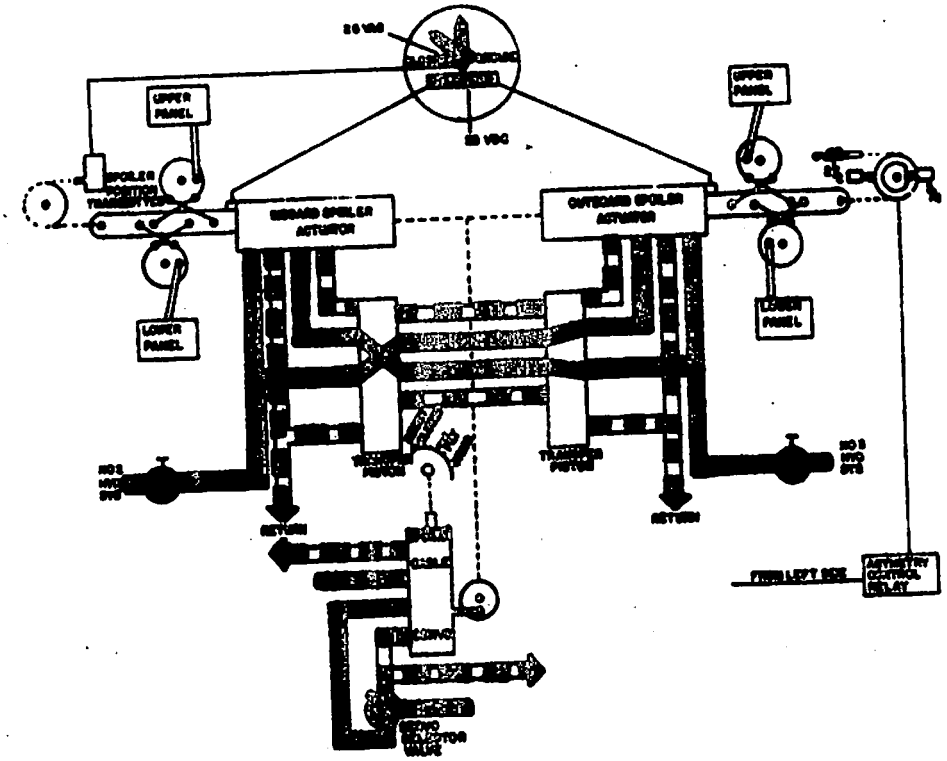

NO. 2 AND NO. 3 HYD SYSTEM OPERATING

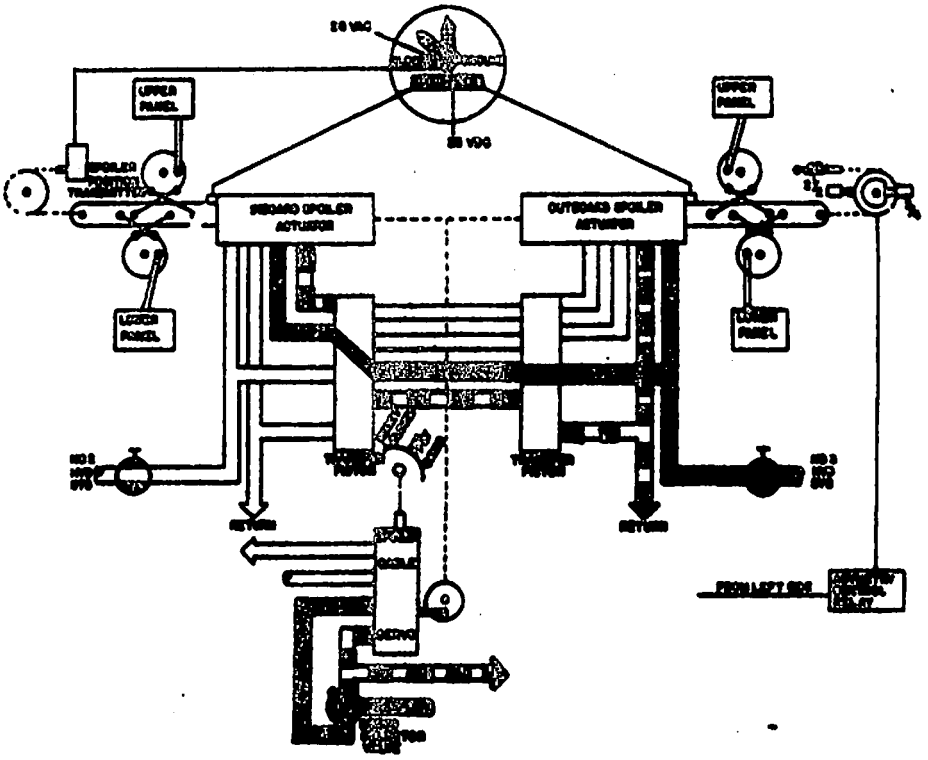

LOSS OF NO. 2 HYD SYSTEM

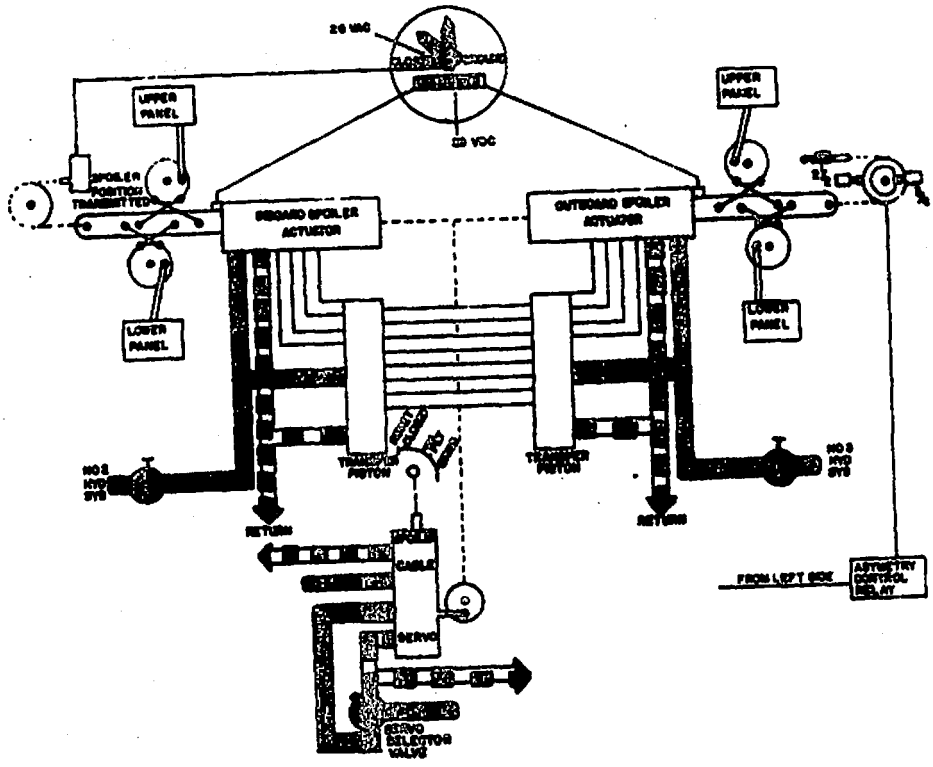

NO 2 AND NO 3 HYD. SYSTEM-OPERATING

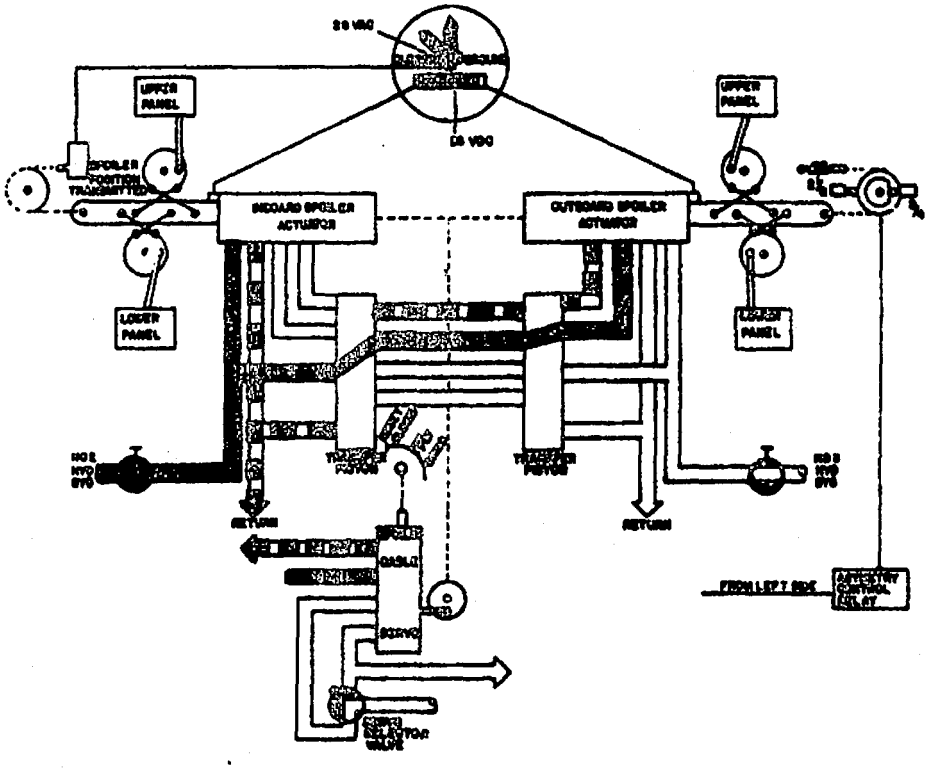

LOSS OF NO 3 HYD. SYSTEM

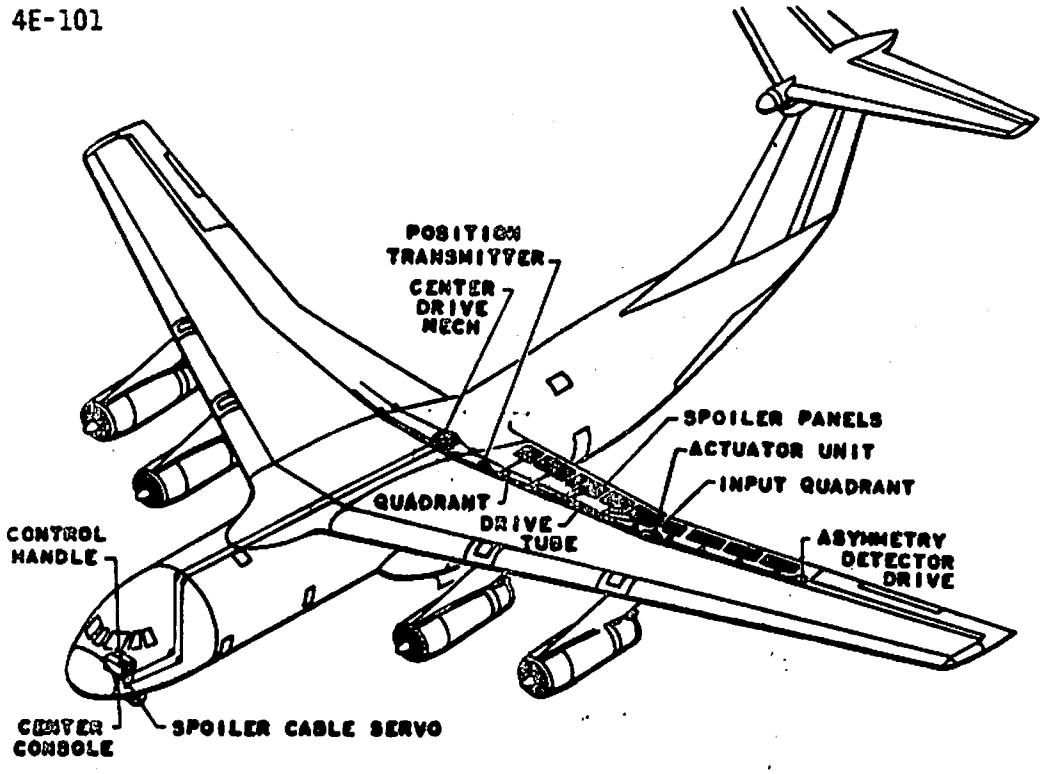

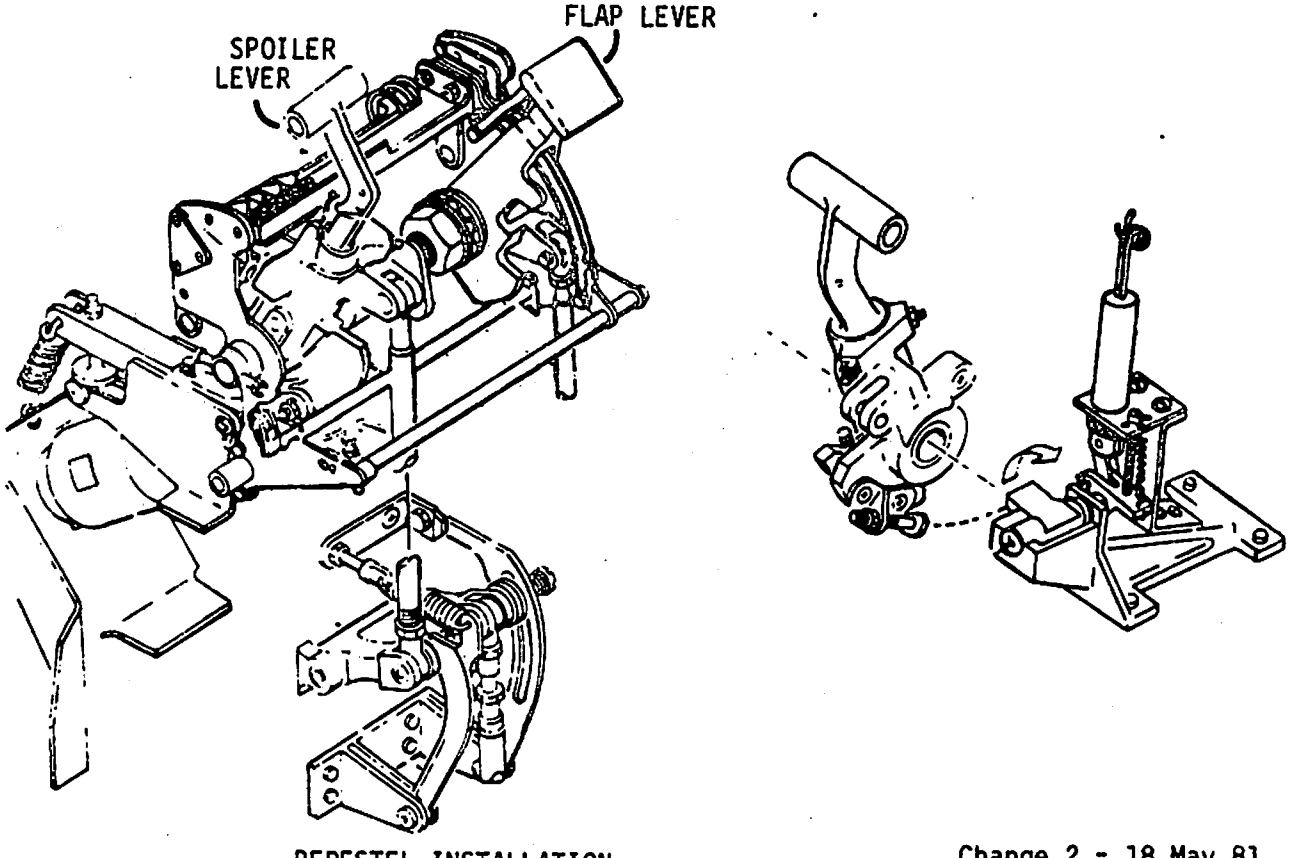

PEDESTEL INSTALLATION

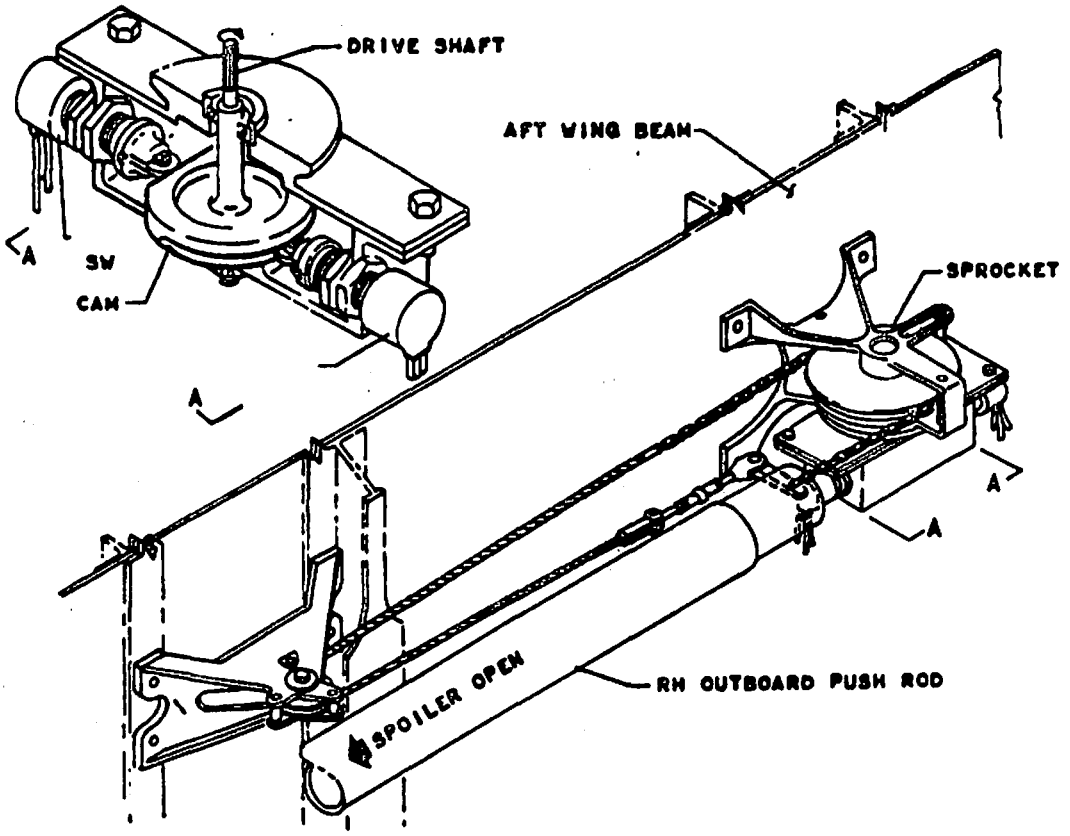

ASYMMETRY DETECTOR DRIVE

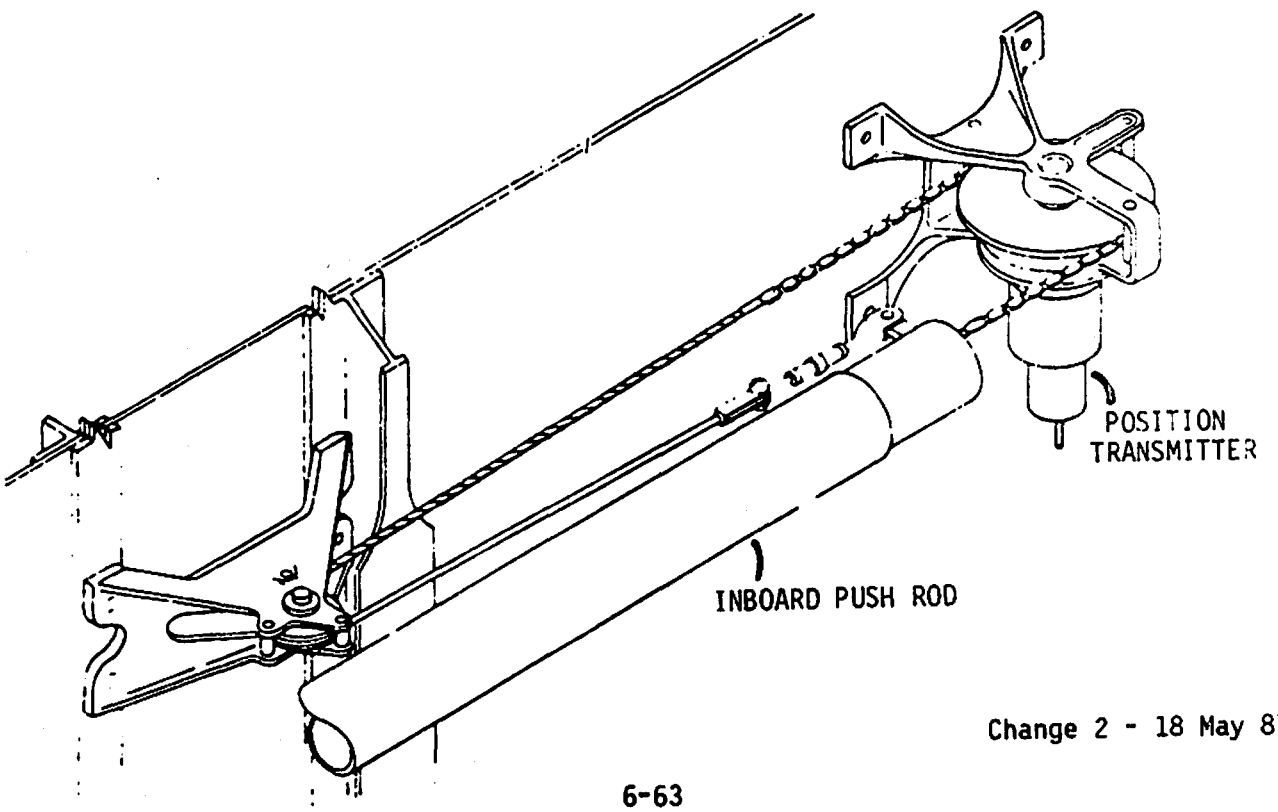

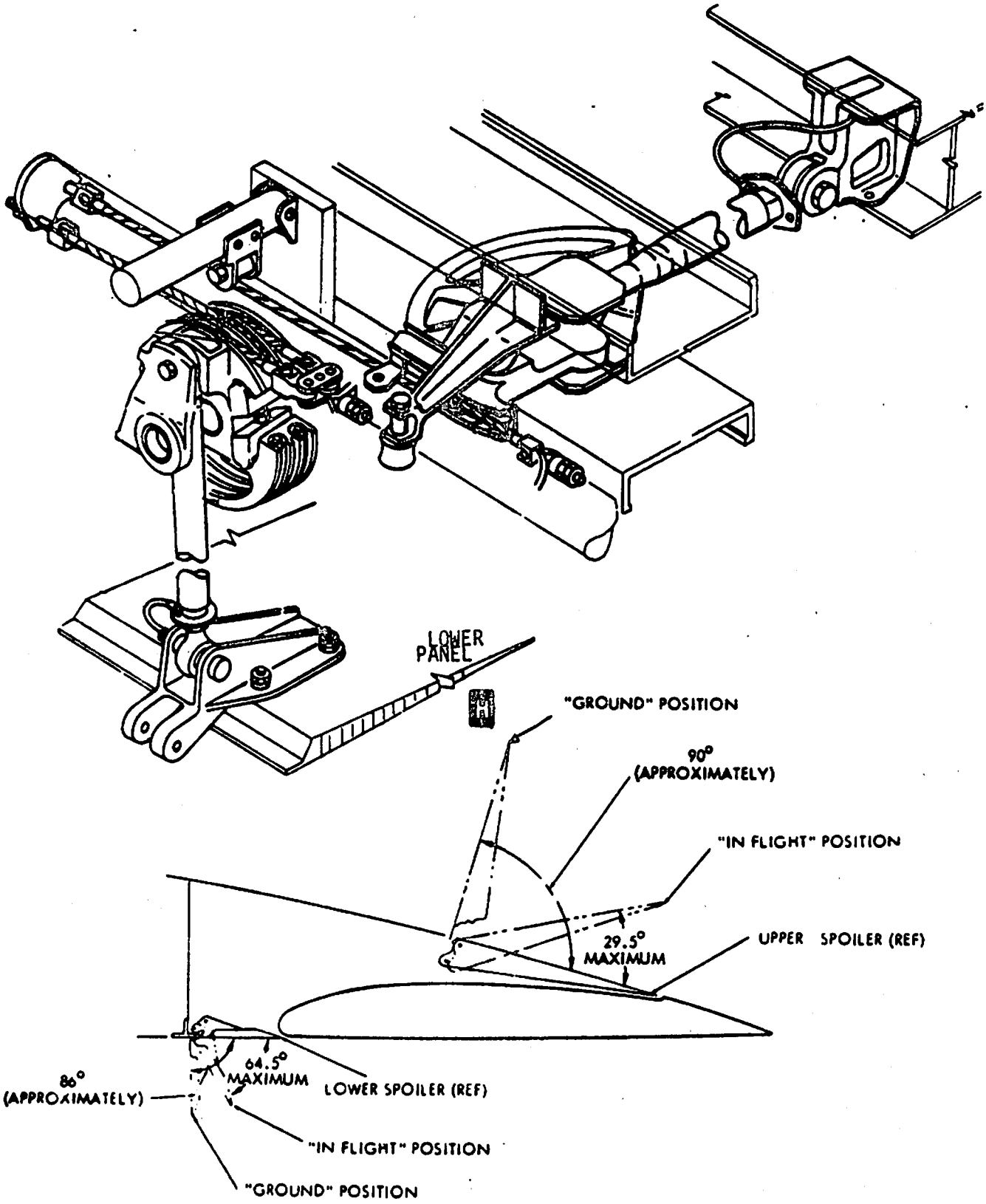
LOWER PANEL
"GROUND" POSITION
90°
(APPROXIMATELY)
"IN FLIGHT" POSITION
29.5°
MAXIMUM
UPPER SPOILER (REF)
64.5°
MAXIMUM
LOWER SPOILER (REF)
86°
(APPROXIMATELY)
"IN FLIGHT" POSITION
"GROUND" POSITION

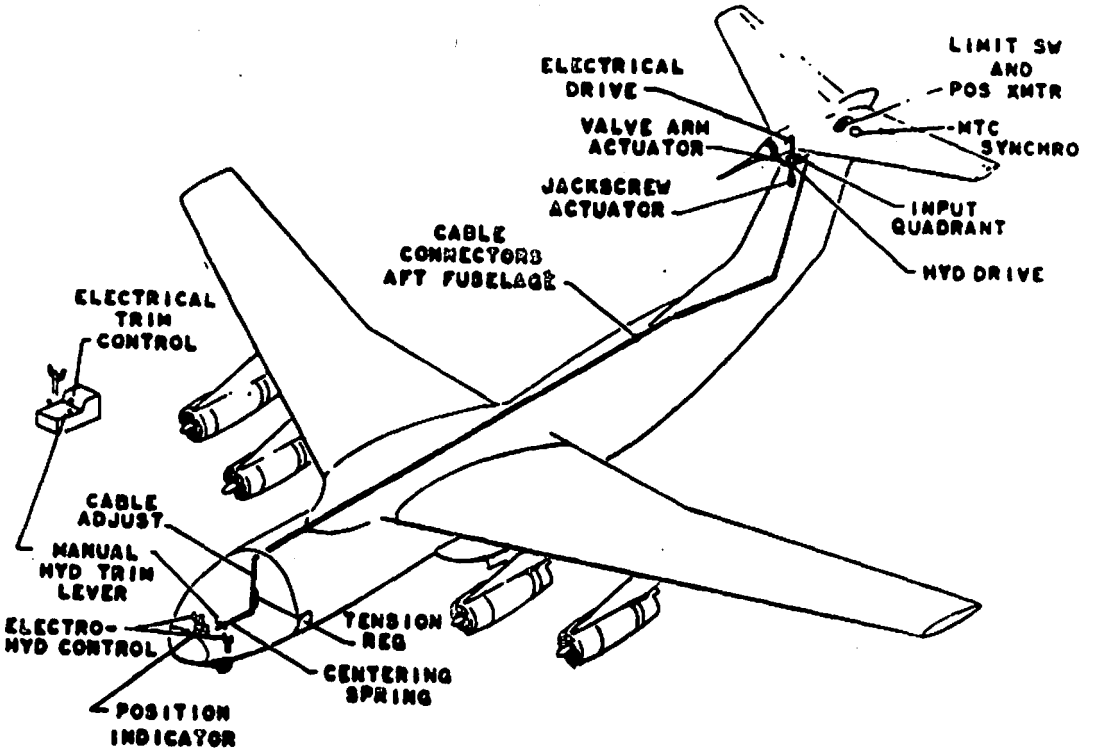

CONTROLS INSTALLATION

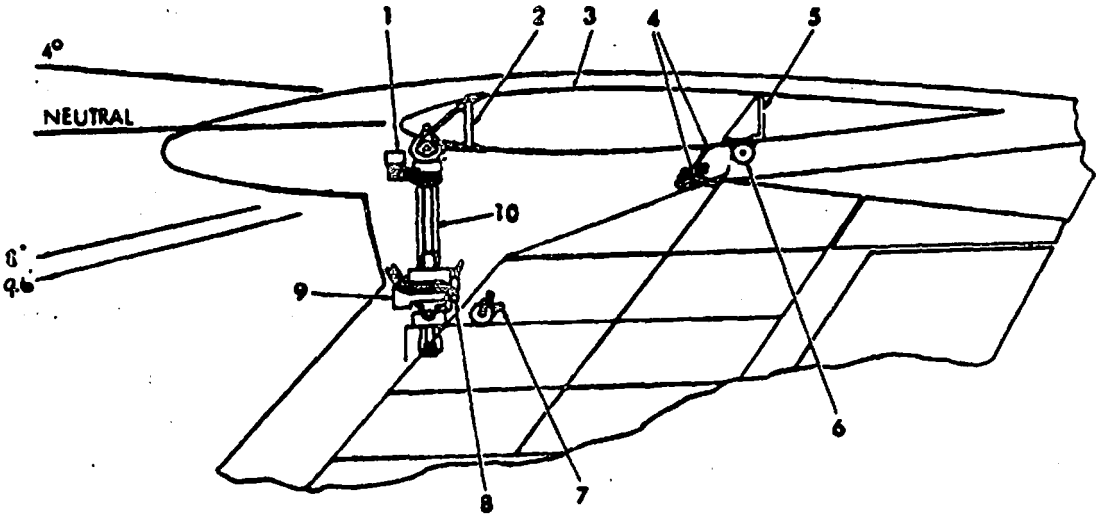

1. ELECTRICAL MOTOR DRIVE ASSEMBLY
2. FWD SPAR
3. HORIZONTAL STABILIZER
4. POSITION TRANSMITTER AND LIMIT SWITCH ACTUATOR
5. AFT SPAR
6. AFT ATTACH FITTING AND PIVOT POINT
7. DIRECTIONAL CONTROL SWITCHES
8. HYDRAULIC FLOW CONTROL VALVE ASSY
9. HYDRAULIC DRIVE ASSEMBLY
10. HORIZONTAL STABILIZER ACTUATOR ASSEMBLY

U.S. Government Printing Office:1981/771-027/100-81