C141A

ENGINE BLEED AIR SYSTEMS

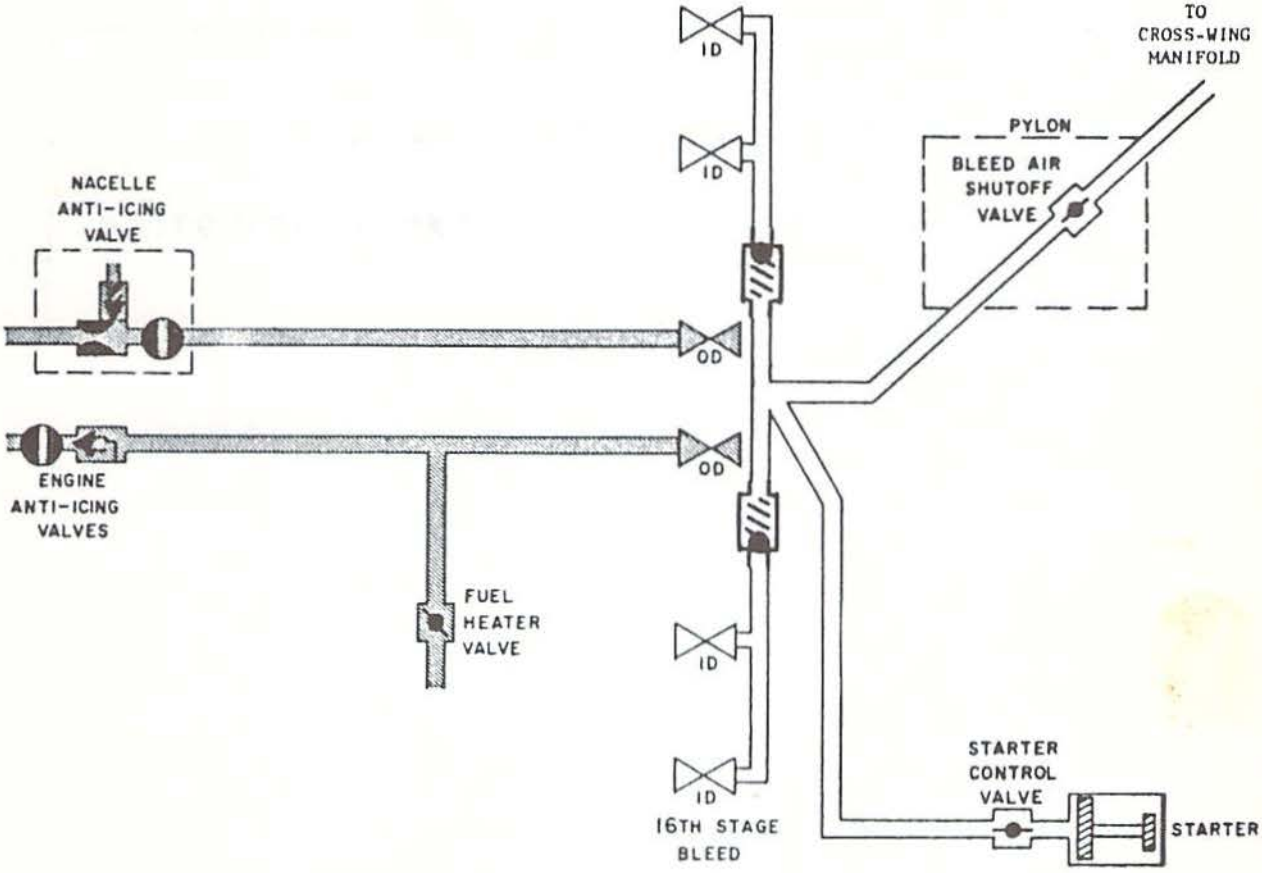

443d TECHNICAL TRAINING SQUADRON

443d MILITARY AIRLIFT WING, TNG (MAC)

ALTUS AIR FORCE BASE, OKLAHOMA

Revised 14 Jan. '78 GPO 1200
Supersedes previous editions

FOR TRAINING PURPOSES ONLY

NOT NECESSARILY CURRENT AFTER DISTRIBUTION

DISTRIBUTION:

443 TCHTS, Altus	1184
60 MAW/DOT, Travis	9
63 MAW/DOT, Norton	5
438 MAW/DOT, McGuire	2
TOTAL	1200

ENGINE BLEED AIR SYSTEMS

STATEMENT OF LEARNING OBJECTIVES

When you complete this program, you will be able to do the following:

1. List the location of the air extraction points on the TF33-P-7 engine.
2. Name the types of air taken from the Diffuser Case.
3. List the purposes of the air extracted from the Diffuser Case.
4. List the three areas of the engine that are anti-iced.
5. List the two methods of control for the engine anti-icing valves.
6. List the indication when both anti-icing valves open.
7. Interpret engine anti-ice system malfunctions.
8. Explain the three functions of the ice detection system control switch.
9. State the operational procedures for the engine anti-ice system.

ENGINE BLEED AIR SYSTEM

Introduction

What is bleed air? It is air that is extracted or bled from the engines to perform a variety of tasks.

Bleed air is used for:

1. Zone II Cooling Control.
2. Engine and Nacelle Anti-Icing.
3. CSD Oil Tank Pressurization.
4. Air Conditioning.
5. Pressurization.
6. Engine Starters.
7. Plus other services.

There are two bleed air systems on the TF33-P-7 engine, a High Pressure INNER-DIAMETER (I.D.) bleed air system and a High Pressure OUTER-DIAMETER (O.D.) bleed air system.

The following pages will discuss the extraction of bleed air and how it is used.

High Pressure air is extracted from the 16th compression stage. Look at the schematic.

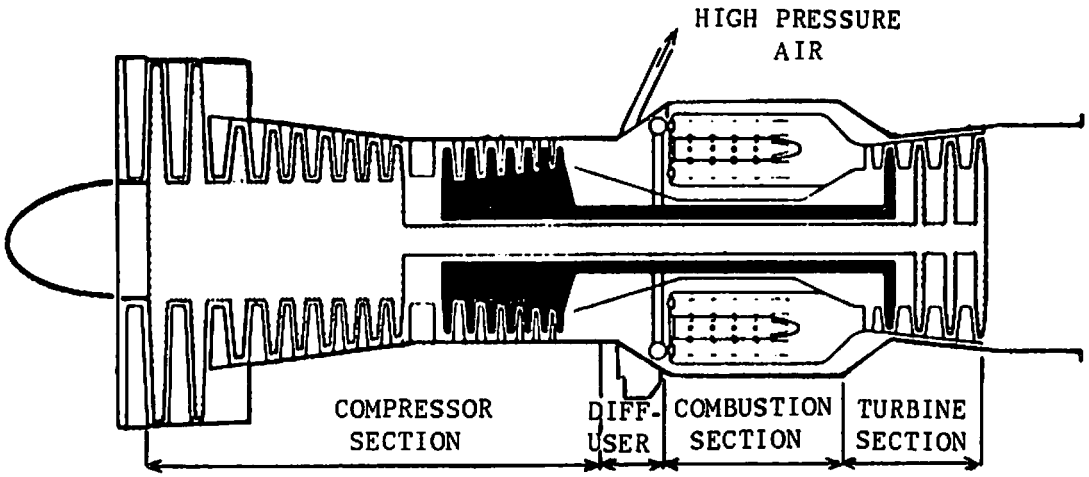

There are two types of High Pressure air, INNER-DIAMETER (I.D.) and OUTER-DIAMETER (O.D.). They are extracted in the following manner:

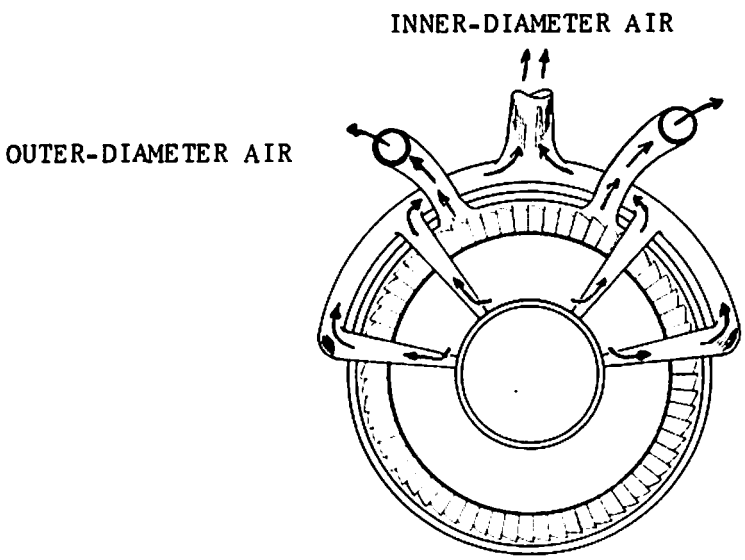

The engine consists of two zones, Zone I and Zone II. Zone I is the hot section (combustion), and Zone II is the cool section (accessory).

Where is Zone I? Look at the picture.

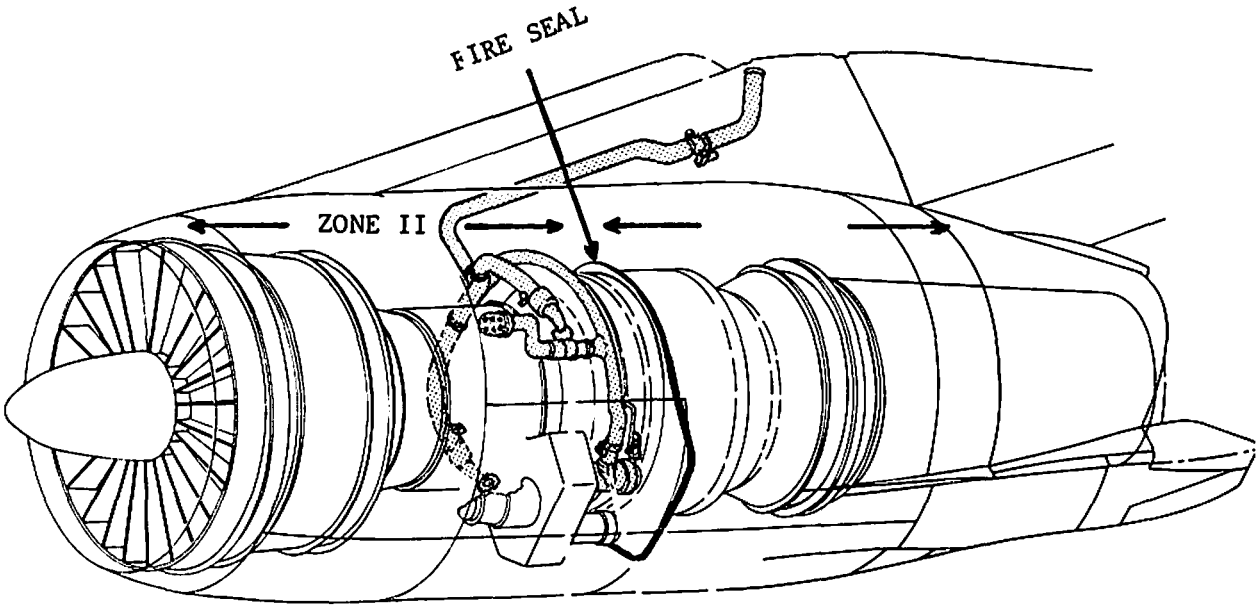

Zone I is the area aft of the fire seal. The fire seal is mounted on a flange at the forward part of the combustion section.

Zone I cooling provides cooling air between the engine and the nacelle to prevent heat damage to the nacelle. The cooling air comes from the fan portion of N_1 compressor. Zone I is cooled constantly.

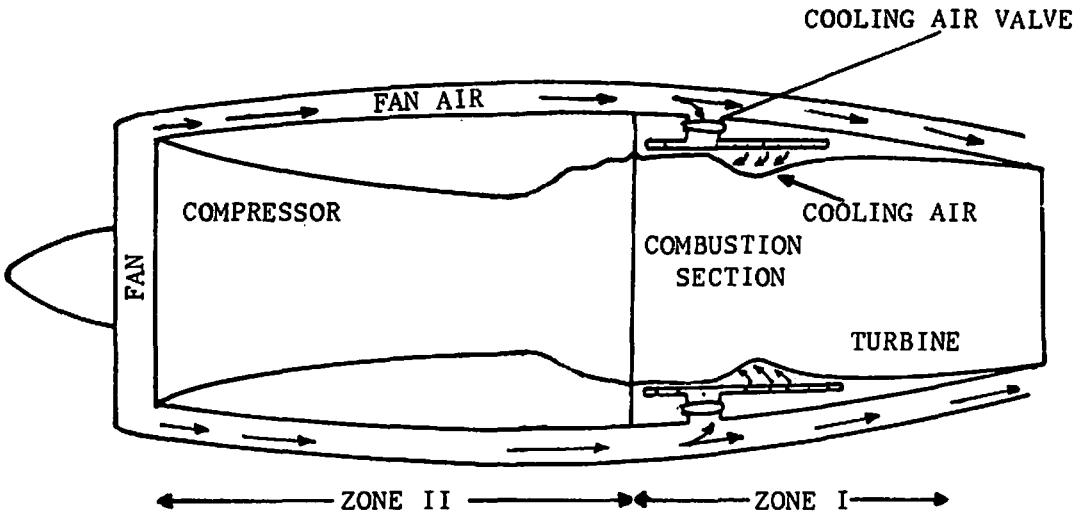

Now let's take a look at the 16th stage High Pressure (INNER-DIAMETER) bleed air system.

The High Pressure (I.D.) bleed air system uses air extracted by four struts extended into the diffuser case to pick up 16th compression stage air. The output from each engine is interconnected by pylon ducting that leads to a CROSS-WING MANIFOLD. Take a look.

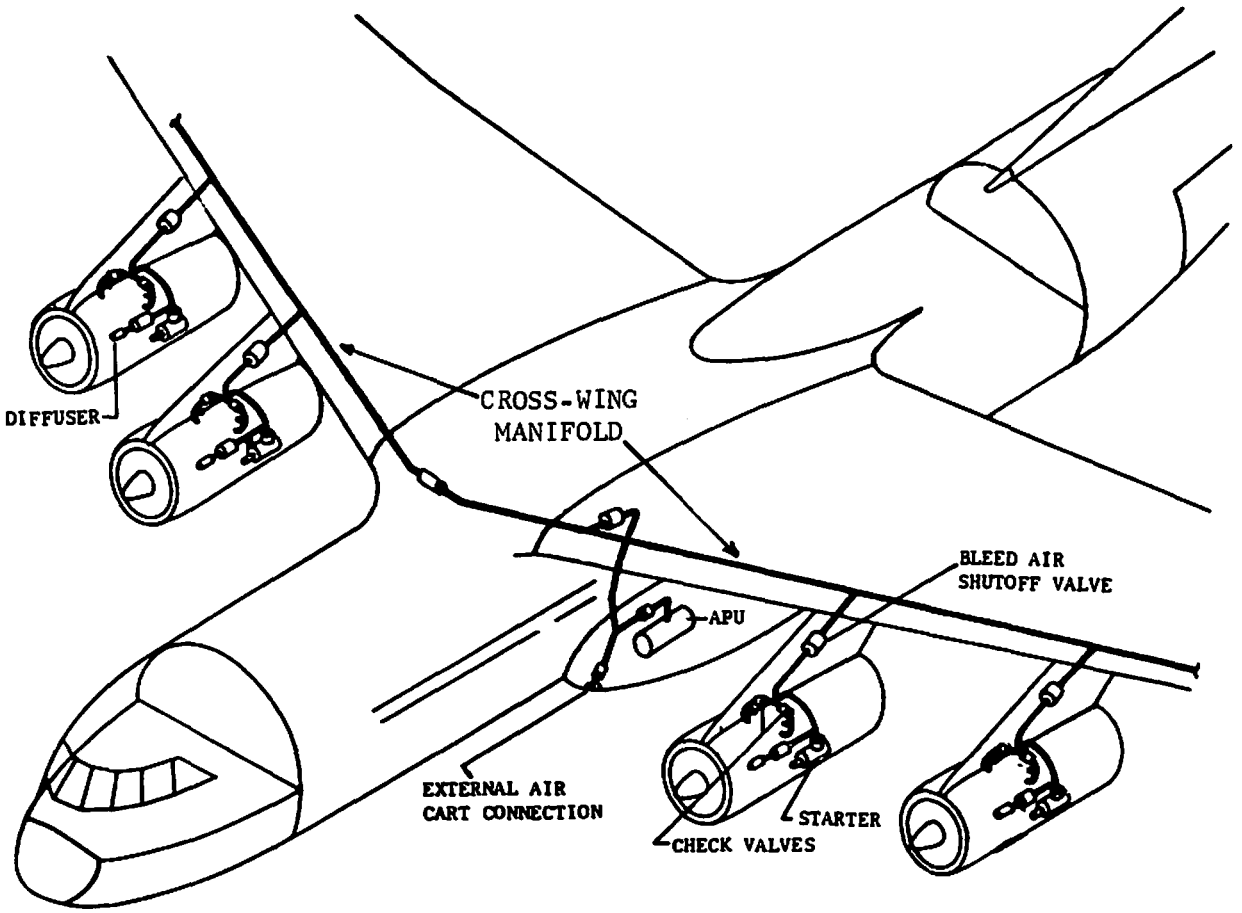

High Pressure (INNER-DIAMETER) bleed air is extracted from four points on each engine. Four struts, located on the Diffuser Case, extend into the engine. These struts are hollow with a drilled passage in the side of each strut close to the inner portion of the engine. Hence the name INNER-DIAMETER (I.D.) air.

In an axial flow engine, the air flow is generally straight through, with only 180 degree rotation. This 180 degree rotation of the air would tend to sling the heavier particles of dust, oil, etc., to the outer portions of the engine cases as it passes through. However, with these struts extended into the Diffuser Case, we can take out the cleanest air available. Look at the picture below and locate the struts.

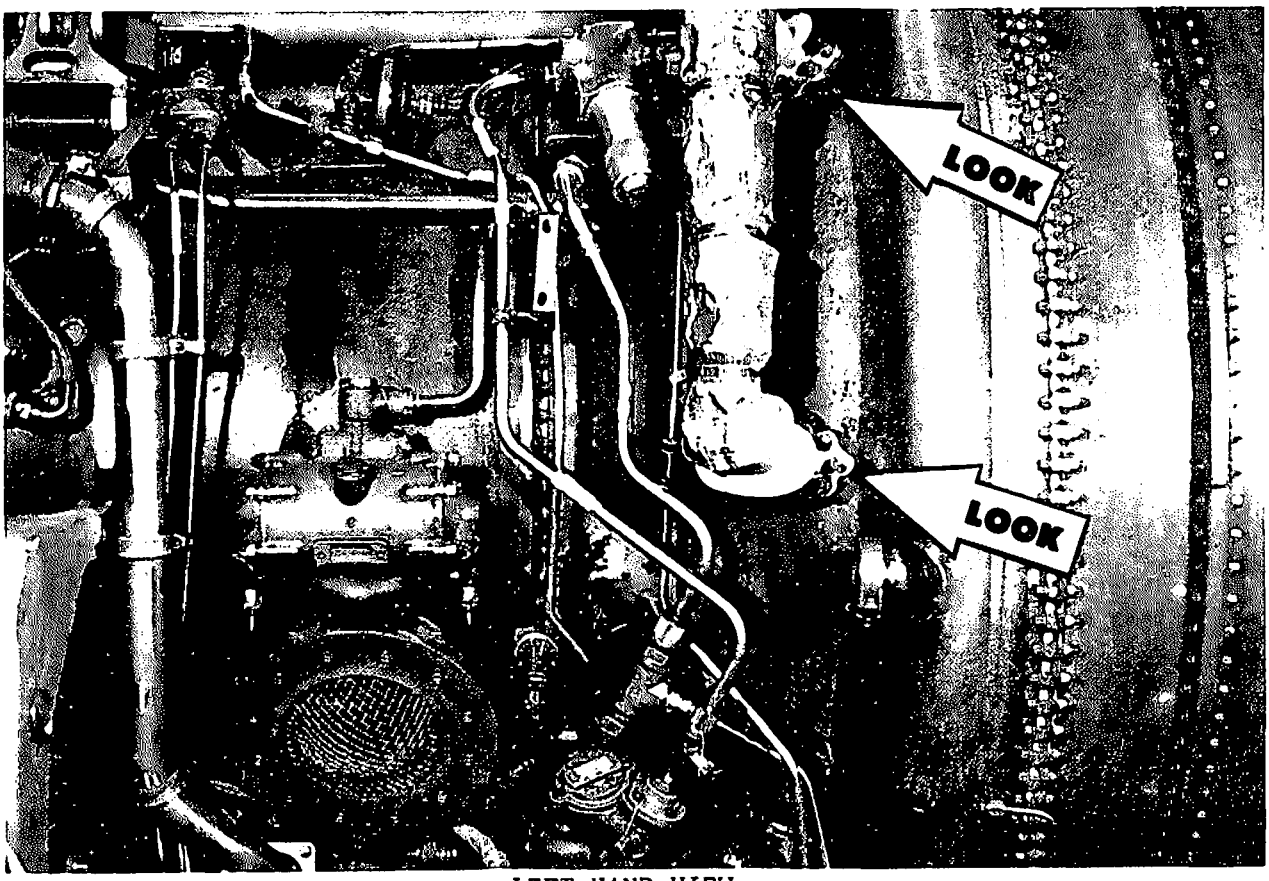

LEFT HAND VIEW

FROM the INFORMATION on Page 8 choose the correct statement from the following passages:

a. High Pressure (I.D.) bleed air is extracted from a single port on the Intermediate Case.

b. High Pressure (I.D.) bleed air is extracted from four struts on the Diffuser Case.

c. High Pressure (I.D.) bleed air is taken from two ports on the Diffuser Case.

By extending four struts into the Diffuser Case, we can pick up the cleanest air from the engine.

Why should we be concerned with getting the cleanest air possible from the engine for the High Pressure (I.D.) bleed air system? Simple. It's going to be the air that you are breathing. All of the INNER-DIAMETER air goes into the CROSS-WING MANIFOLD, then from the CROSS-WING MANIFOLD it can be used for Engine Starters, Air Conditioning, Pressurization, Wing Anti-Icing, Windshield Rain Removal, and Cargo Floor Heat.

Choose the correct statement:

a. High Pressure (I.D.) bleed air is picked up in the Diffuser Case and is used for Wing and Empennage De-Icing, Air Conditioning, and Pressurization.

b. High Pressure (I.D.) is used for anti-icing only.

c. High Pressure (I.D.) bleed air is extracted from the Diffuser Case and sent to the cross-wing manifold. It can be used for Engine Starters, Air Conditioning, Pressurization, Wing Anti-Icing, Windshield Rain Removal, and Cargo Floor Heat.

High Pressure (I.D.) bleed air is extracted from the Diffuser Case by four struts. Each of these struts has a venturi to limit the amount of air that be extracted, but there is sufficient air for use in Engine Starters, Air Conditioning, Pressurization, Wing Anti-Icing, Windshield Rain Removal, and Cargo Floor Heat.

The ducting attached to the struts have one-way check valves installed to prevent reverse air flow in the event an engine is shut down. Also, when the aircraft APU or an external air cart is furnishing air to the manifold, the check valves will prevent air from entering the engine, but allow it to reach the starter control valve.

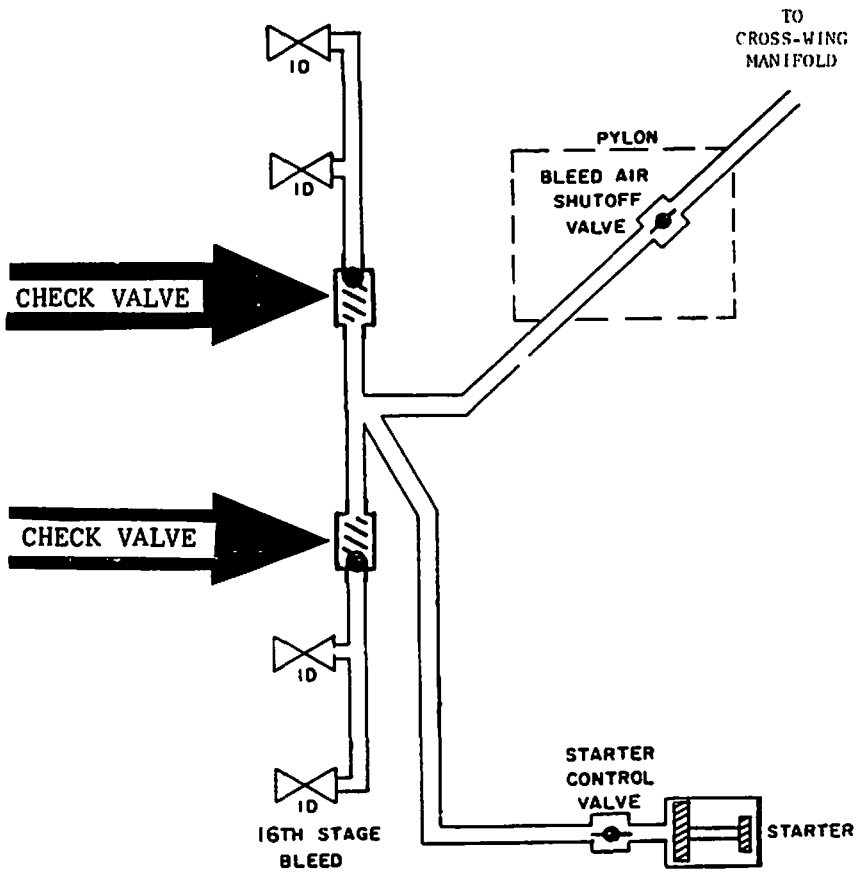

The schematic below represents only one engine. The piping shown is the INNER-DIAMETER bleed air ducting of one engine.

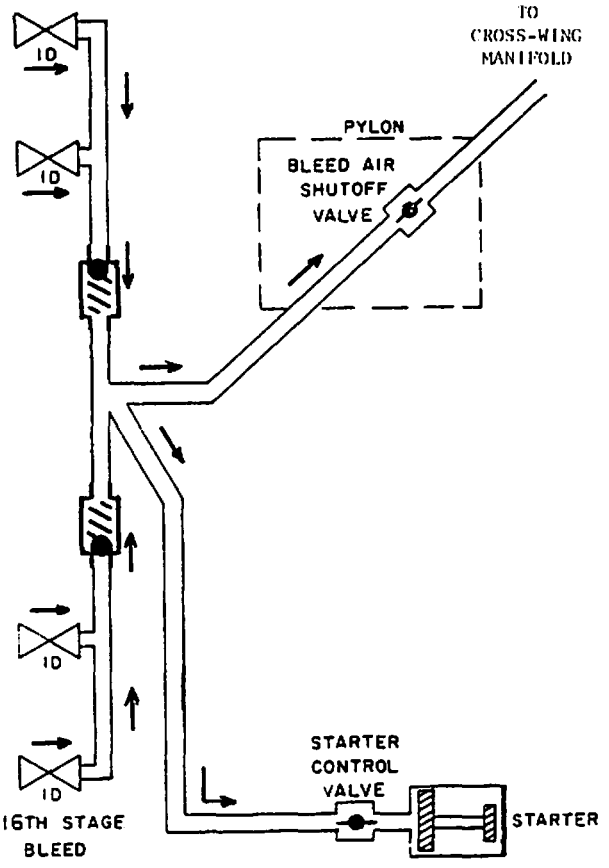

If this engine was operating, the High Pressure (I.D.) bleed air flow would be directed to two (2) places:

a. Cross-Wing Manifold

b. Starter Control Valve

All units operated by bleed air would then operate. Take a close look at the schematic and follow the air flow.

Now that you have traced the path of the I.D. air, see what you can do with this question.

Engines Nr 1, 2 and 3 are operating. You have just started engine Nr 4 and the starter control valve failed to close. What action would it take to stop engine Nr 4 from rotating?

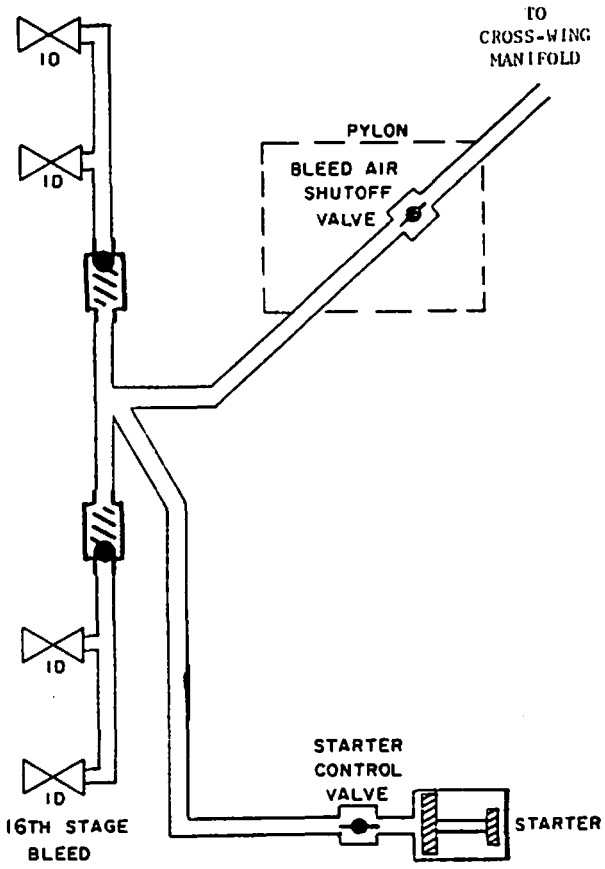

a. Shut the engine down.

b. Close the bleed air shutoff valve.

c. Shut the engine down by pulling the fire handle.

Shut the engine down by pulling the fire handle to isolate the starter from all air sources.

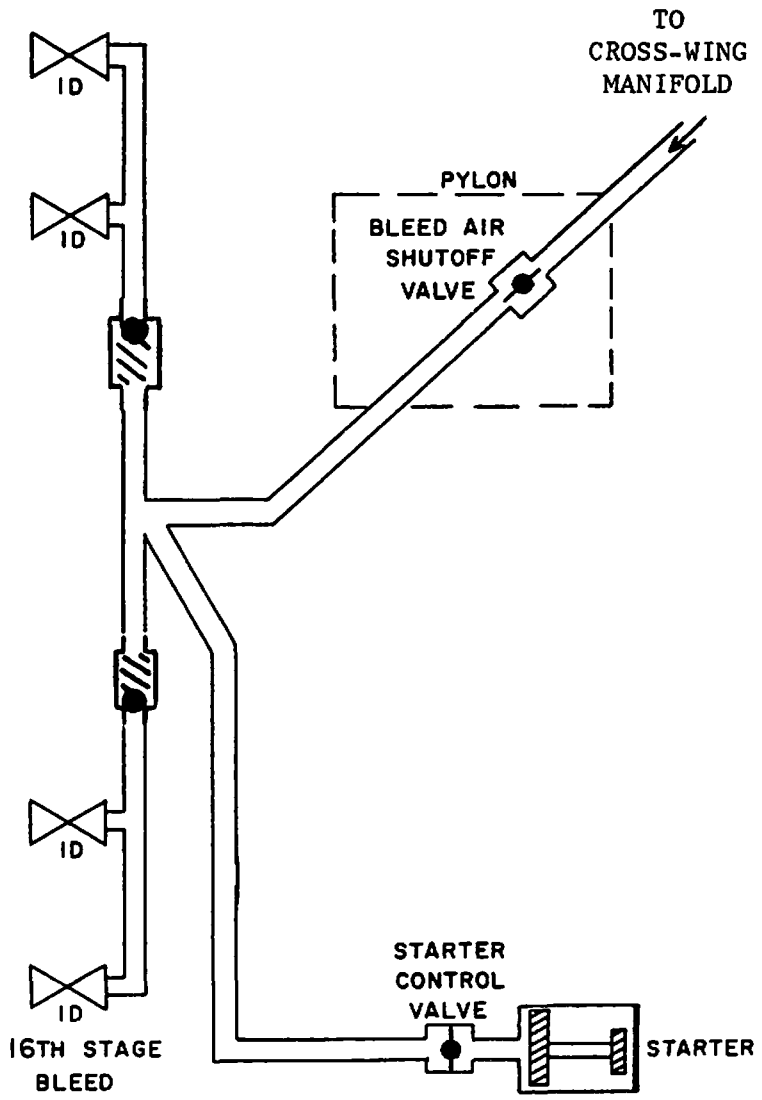

Before discussing the OUTER-DIAMETER portion of the bleed air system, let's review by answering the questions below.

a. High pressure bleed air is extracted from the _____ stage of compression.

b. The two types of high pressure air extracted from the engine are called _____ and _____.

c. The air that actually cools Zone I comes from the _____.

d. High pressure (I.D.) air is extracted by _____ struts on the Diffuser Case.

e. To get the engine to stop rotating if the starter control valve failed to close, it would be necessary to shut the engine down by pulling the _____ _____.

Check your answers and make the necessary corrections on Page 14.

a. 16th

b. I.D. O.D.

c. fan

d. four

e. fire handle

Now let's continue our discussion with the High Pressure (OUTER-DIAMETER) Bleed Air System. Each engine has its own High Pressure (O.D.) system. Two ports take high pressure bleed air from the outer-diameter (hence the name) of the Diffuser Case.

This OUTER-DIAMETER air is used by the Zone II Cooling Ejectors, Fuel Deicer Heaters, CSD Oil Tank and Engine and Nacelle Anti-Icing. None of the OUTER-DIAMETER air leaves the engine area. It is all used at the engine.

In the picture below, note the two ports for taking High Pressure (O.D.) bleed air.

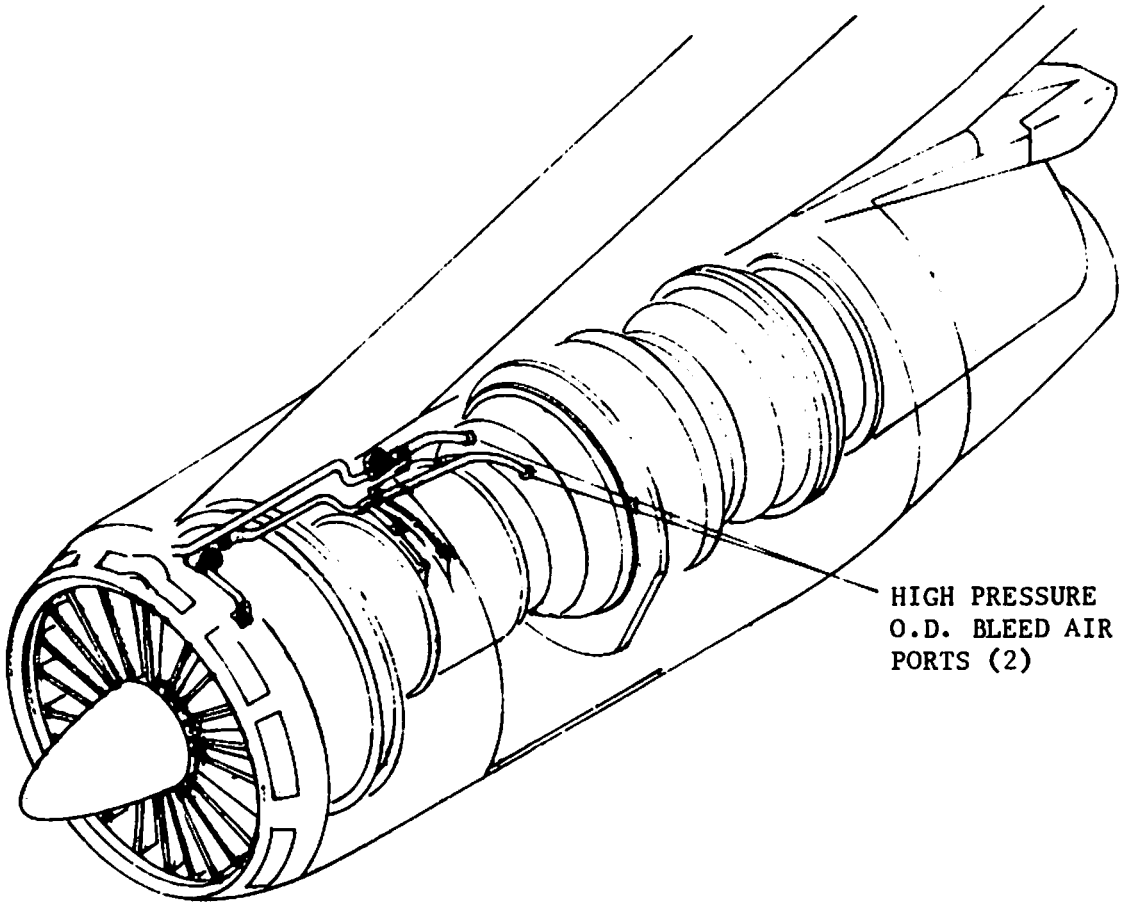

First, let's look at Zone II Cooling. It is provided to prevent heat damage to the nacelle structure and for cooling the accessories. Zone II Cooling is accomplished by AMBIENT AIR flowing into the nacelle through louver doors located on the bottom of the engine cowling.

What causes the AMBIENT AIR to flow into the nacelle? Take a look.

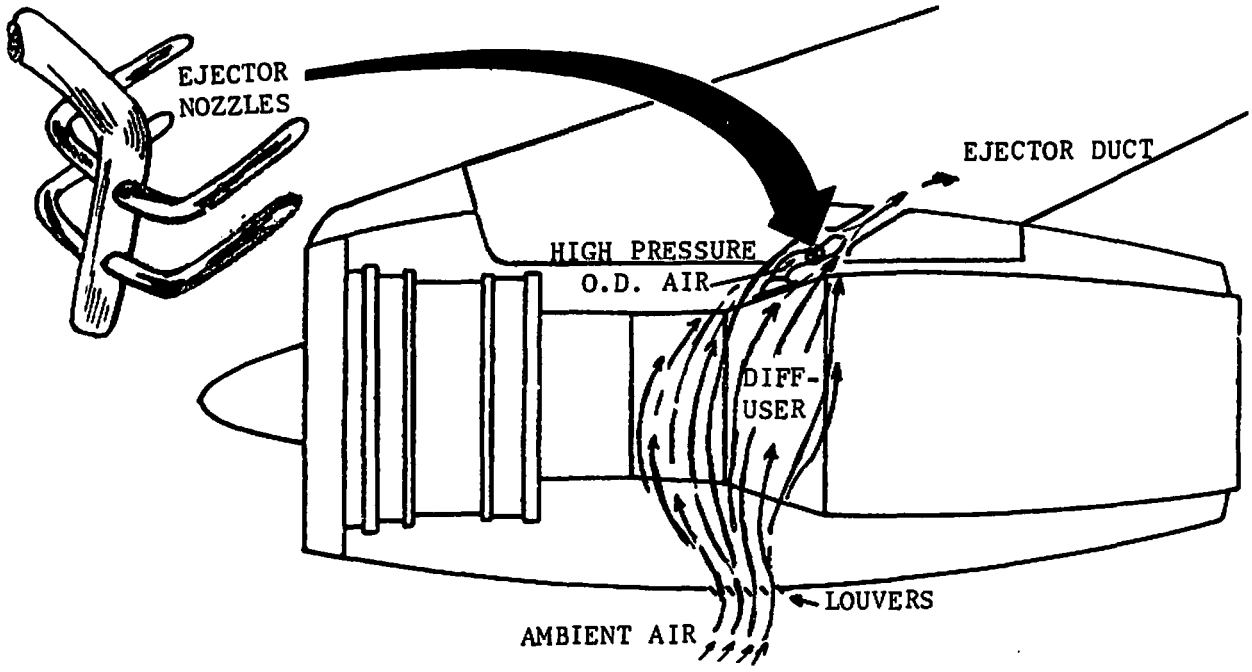

Two ejector ducts are located in the pylon fairing. Four (4) ejector nozzles are in front of each duct. These ejector nozzles, using <u>High Pressure O.D.</u> bleed air from the Diffuser Case, direct streams of air into the ejector ducts which causes cooling air to be ejected at a faster rate. This in turn causes more cooling air to flow through the nacelle.

Zone II is cooled by:

a. Fan Air.

b. High Pressure O.D. Air.

c. Ambient Air.

Ambient Air is correct.

We use High Pressure O.D. to do the work for us, but Zone II is cooled by ambient air.

Zone II Cooling will automatically shut off at 19,000 feet by the use of a pressure switch.

Zone II Cooling is an automatic operation requiring no control from the flight deck to put the system into operation. There are no lights to monitor or switches to throw. However, should trouble develop and you shut an engine down by pulling the Fire Emergency Control Handle (T-Handle), a butterfly valve in the ejector ducts will close and stop all air that would flow through the zone. This permits the fire extinguishing agent to be concentrated on the fire, rather than being forced out of the nacelle by the cooling air flow.

Another use of the High Pressure O.D. air is in the Fuel Heater.

Each engine has a FUEL HEATER installed in the engine fuel system. This heater uses hot High Pressure O.D. air to melt any ice crystals that may form in the fuel at the engine.

Each fuel heater is controlled by a FUEL HEATER SWITCH. When a fuel heater switch is moved to ON, a green indicator light above the switch illuminates to let the engineer know the fuel heater valve has opened. Locate the four (4) fuel heater switches and indicator lights on the panel below.

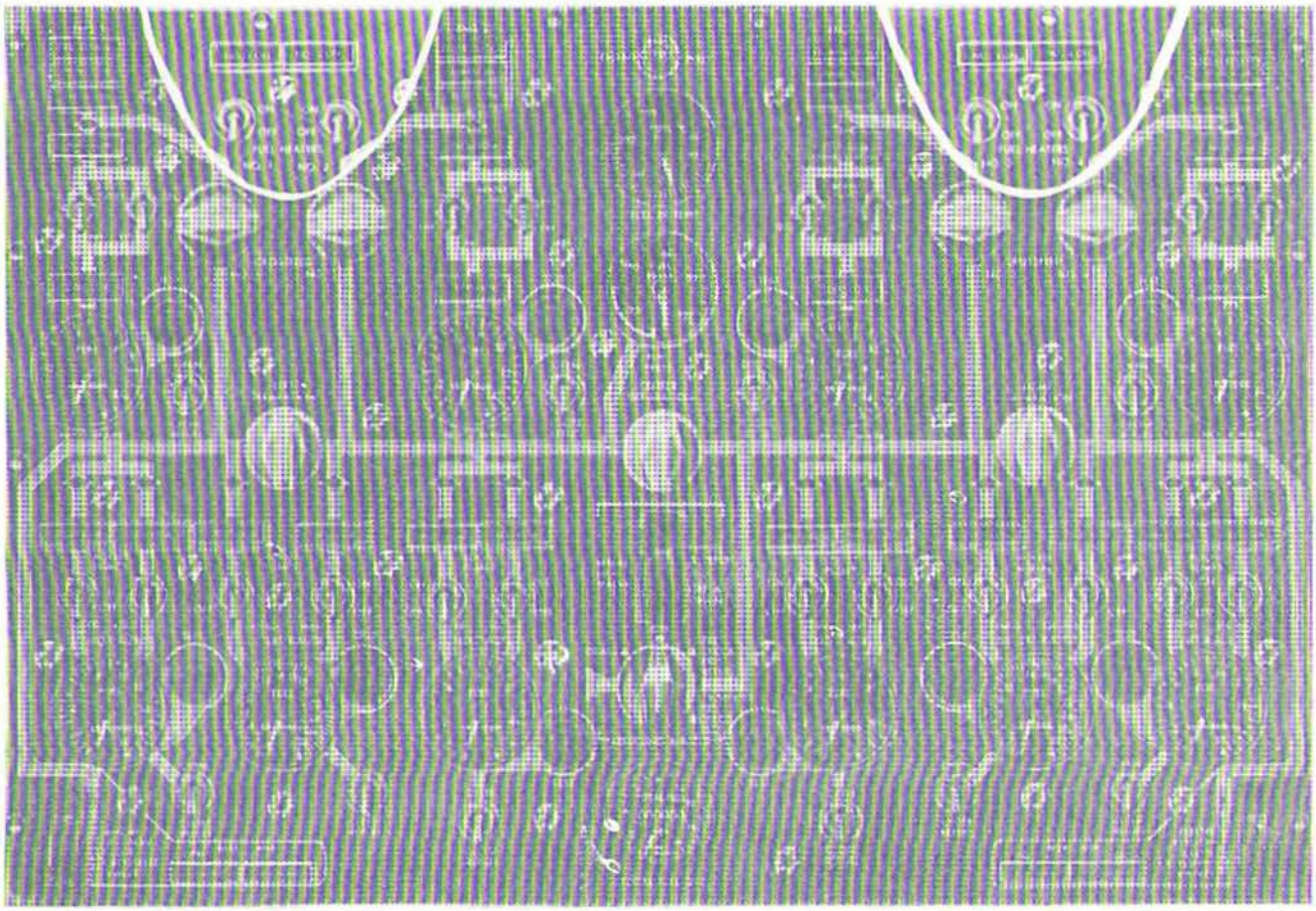

FLIGHT ENGINEER'S FUEL MANAGEMENT PANEL

Got 'em located?

Whenever conditions exist to warrant the use of the Fuel De-Icer Heater, all the engineer has to do is to move the FUEL HEATER switches to the ON position. This action will electrically cause the valve to open. When the valve opens, the Indicator Light will illuminate and hot air will start flowing through the Heater and then is dumped overboard.

What is the air source for the fuel heaters?

a. High Pressure I.D. Air.

b. High Pressure O.D. Air.

High Pressure O.D. Air is used in the Fuel Heaters. In fact, none of the O.D. air leaves the engine area.

Outer diameter air is used to pressurize the CSD (Constant Speed Drive) oil tank to assure a positive flow of oil to the CSD.

Since this tank is pressurized, wait approximately five (5) minutes after engine shutdown to allow the pressure to decrease before opening the cap.

Now for the last use of High Pressure O.D. Air.

OK, our biggest and probably the most important use of the High Pressure O.D. Air is the ENGINE and NACELLE ANTI-ICING.

The type of system on the TF33-P-7 engine is known as a Running Wet system. In other words we want to keep the water in a liquid form. Water won't harm the engine, but ice entering the intake could do some damage.

Could we say then, that a Running Wet type system is a:

a. de-icing type system.

b. anti-icing type system.

c. part anti-icing, part de-icing system.

Anti-icing system is correct. The idea behind this system is to keep the water from freezing. Water running back into the engine won't hurt a thing; ice could do damage to the engine.

There are three (3) areas that are anti-iced. On the engine itself, the inlet guide vanes and the nose dome receive hot air. On the nacelle, just the intake lip is anti-iced. Look at the picture below and note the areas anti-iced.

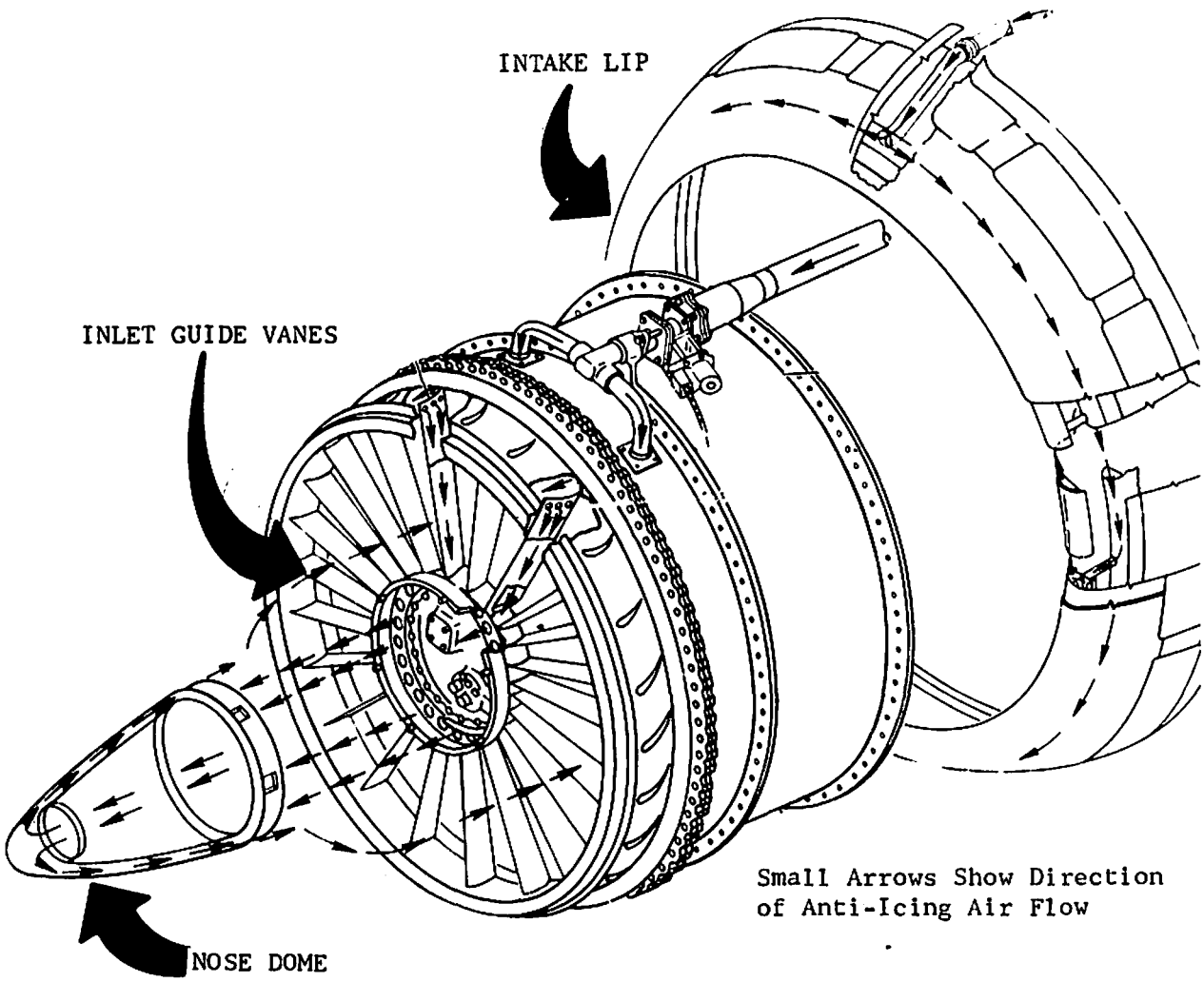

Can you now see the reason for keeping the water in a liquid state?

Yes

No

Absolutely. Ice entering the intake can cause damage to the engine.

The inlet guide vanes are hollow and the hot air flows through these and out into the nose dome. At the same time, the intake lip is receiving hot air.

Heat should be applied prior to entering a known icing area. This will prevent a buildup of ice which could break off and enter the engine.

OK, now that you know the areas that are anti-iced, let's see what we can do about controlling the system.

There are two ways to control the ENGINE and NACELLE ANTI-ICING system, MANUALLY or AUTOMATICALLY.

First the MANUAL operation. The MANUAL operation is simply the manipulation of the ENGINE ANTI-ICE Switches on the pilot's overhead control panel. There is one ANTI-ICE ON indicator light per engine.

Take a look at the switches and indicator lights.

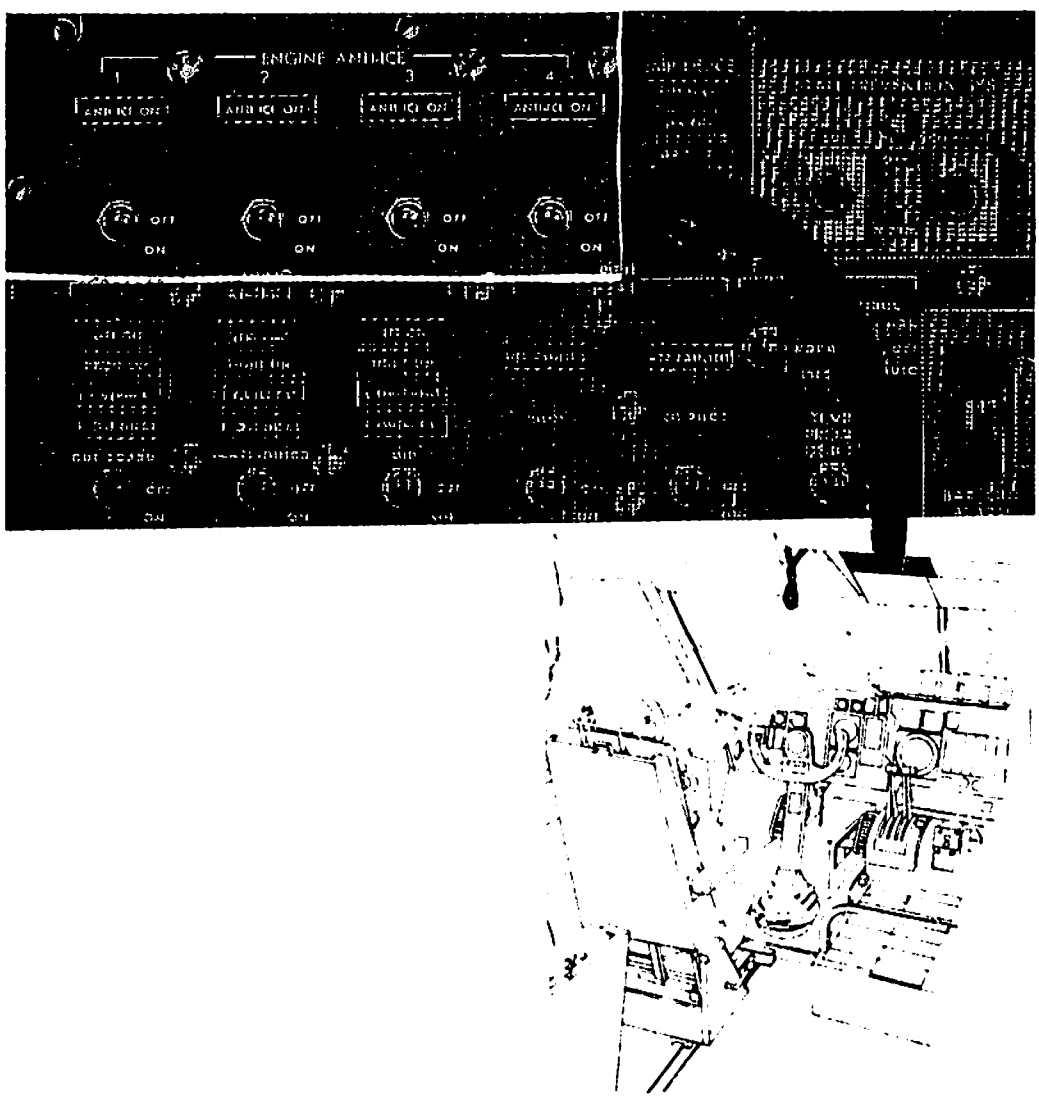

When the operator places an ENGINE ANTI-ICE switch to the ON position it will cause two valves on the engine to open. One of these valves is a solenoid controlled, air operated valve and the other is a DC motor controlled valve.

Note the valve location in the picture below.

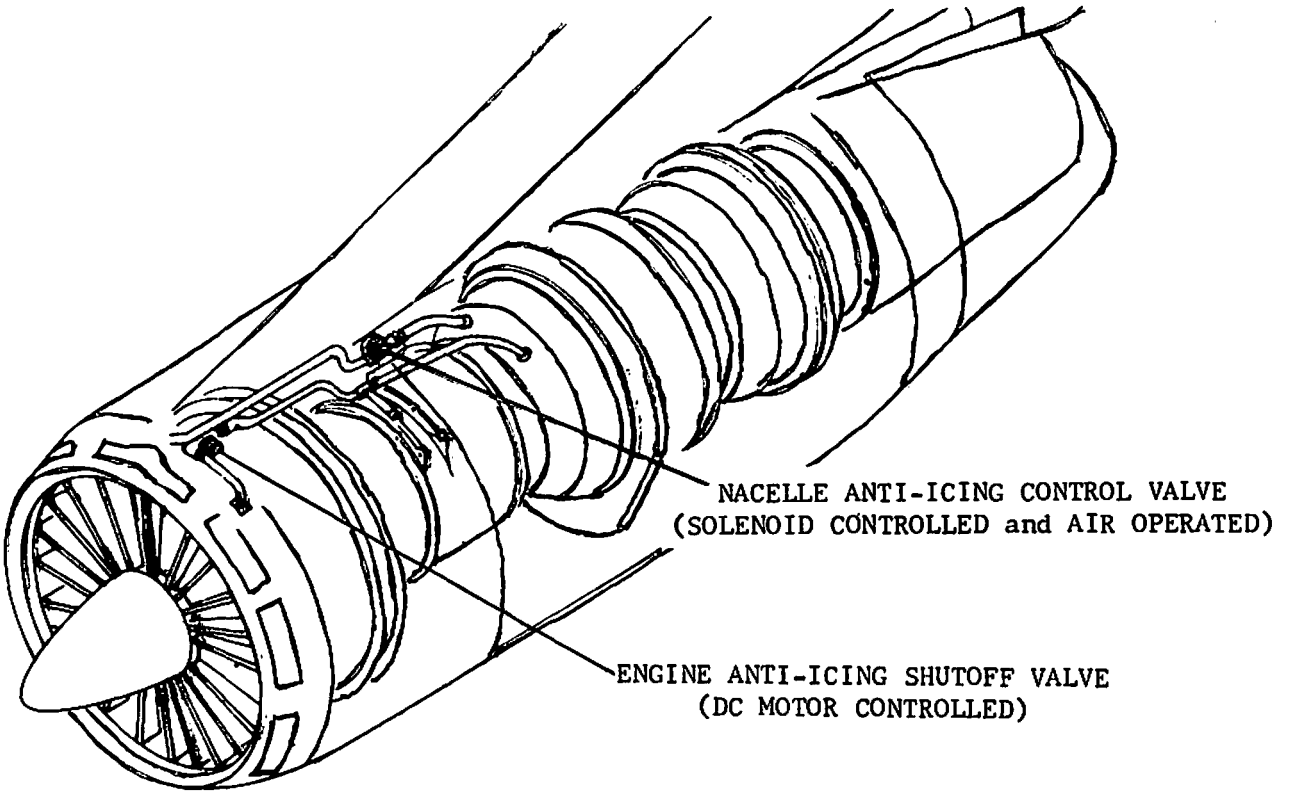

In order to get both valves to open, you would need:

a. the engines running.

b. electrical DC power available.

c. DC power available and the engines running.

Yes. It is necessary to have the engines running and DC power available to open both valves, since one valve is DC motor driven and the other is solenoid controlled, air operated. Air to operate the valve comes from the OUTER-DIAMETER portion of the Diffuser Case.

One ENGINE ANTI-ICE switch causes the valves to open when switched to the ON position. The ANTI-ICE ON indicator light will illuminate when both valves open and will extinguish when both valves go closed.

What would be the probable cause if an ANTI-ICE ON light failed to illuminate when an ENGINE ANTI-ICE switch was placed to the ON position with DC power available and the engines running.

a. Insufficient air supply.

b. Circuit breaker open.

c. One or maybe both of the valves failed to open.

There is one ANTI-ICE ON light for two valves; if one of these valves fails to open, the light will not come ON.

The same is also true in reverse, for if after the ENGINE ANTI-ICE switch is placed to the OFF position and one valve fails to close, the ANTI-ICE ON light will remain illuminated.

Anti-icing can be turned ON by the operator anytime he decides it is necessary. Remember, by saying MANUAL, we mean that the operator has to manually position a switch.

This will wrap up the MANUAL part of the system; now we will discuss the AUTOMATIC feature.

Now we all know that modern systems on modern aircraft usually have more than a manual operation. Therefore, an AUTOMATIC feature has been built into this Engine and Nacelle Anti-Icing System to help the pilot.

Located on the pilot's overhead panel there is an ICE DET CONTROL switch. Look at the picture and locate the ICE DET CONTROL switch.

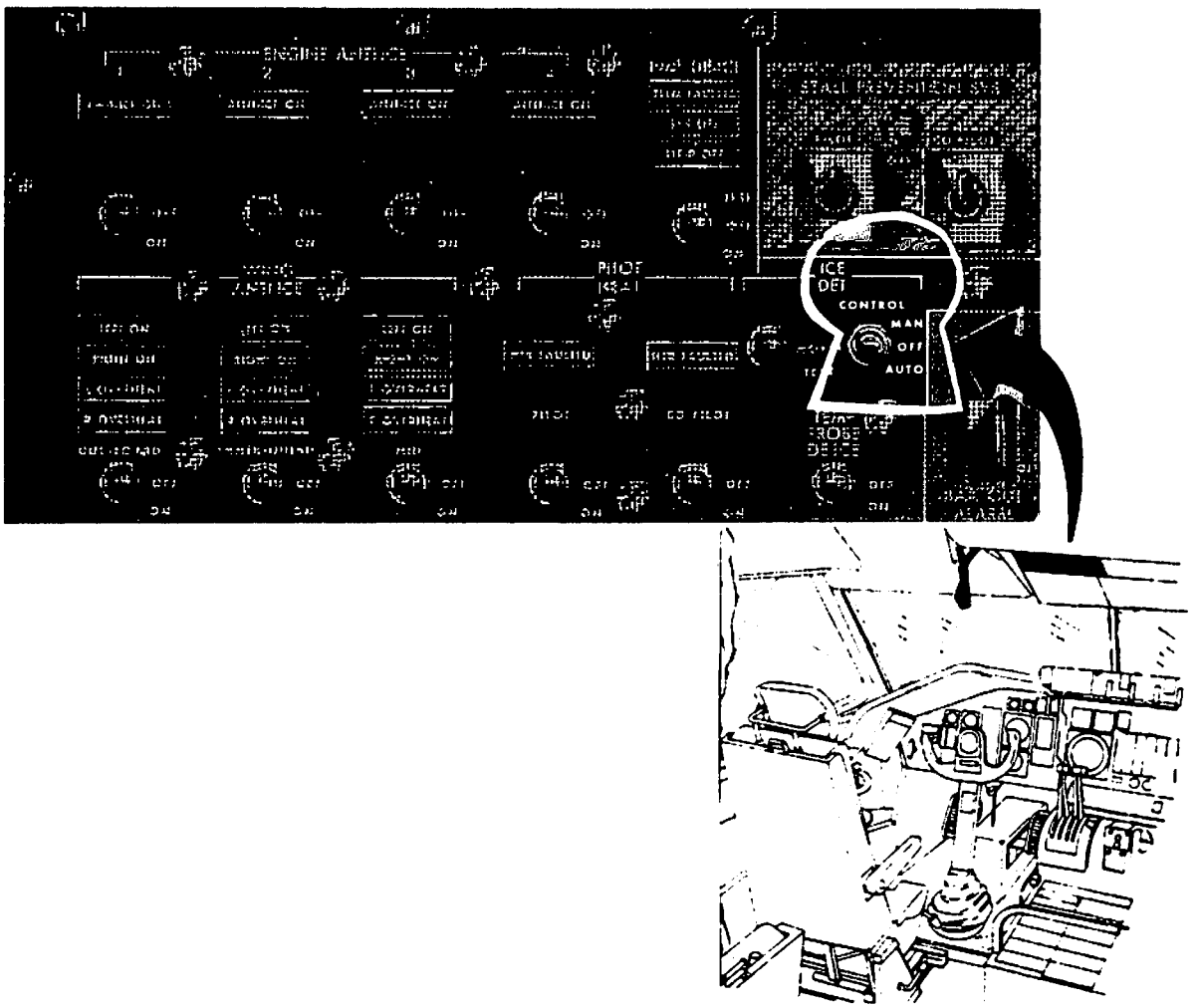

The ICE DET CONTROL switch is located on the:

a. center console.

b. pilot's overhead control panel.

c. flight engineer's panel.

The ICE DET CONTROL switch is located on the pilot's overhead control panel with the rest of the anti-icing switches. Have another look at the picture.

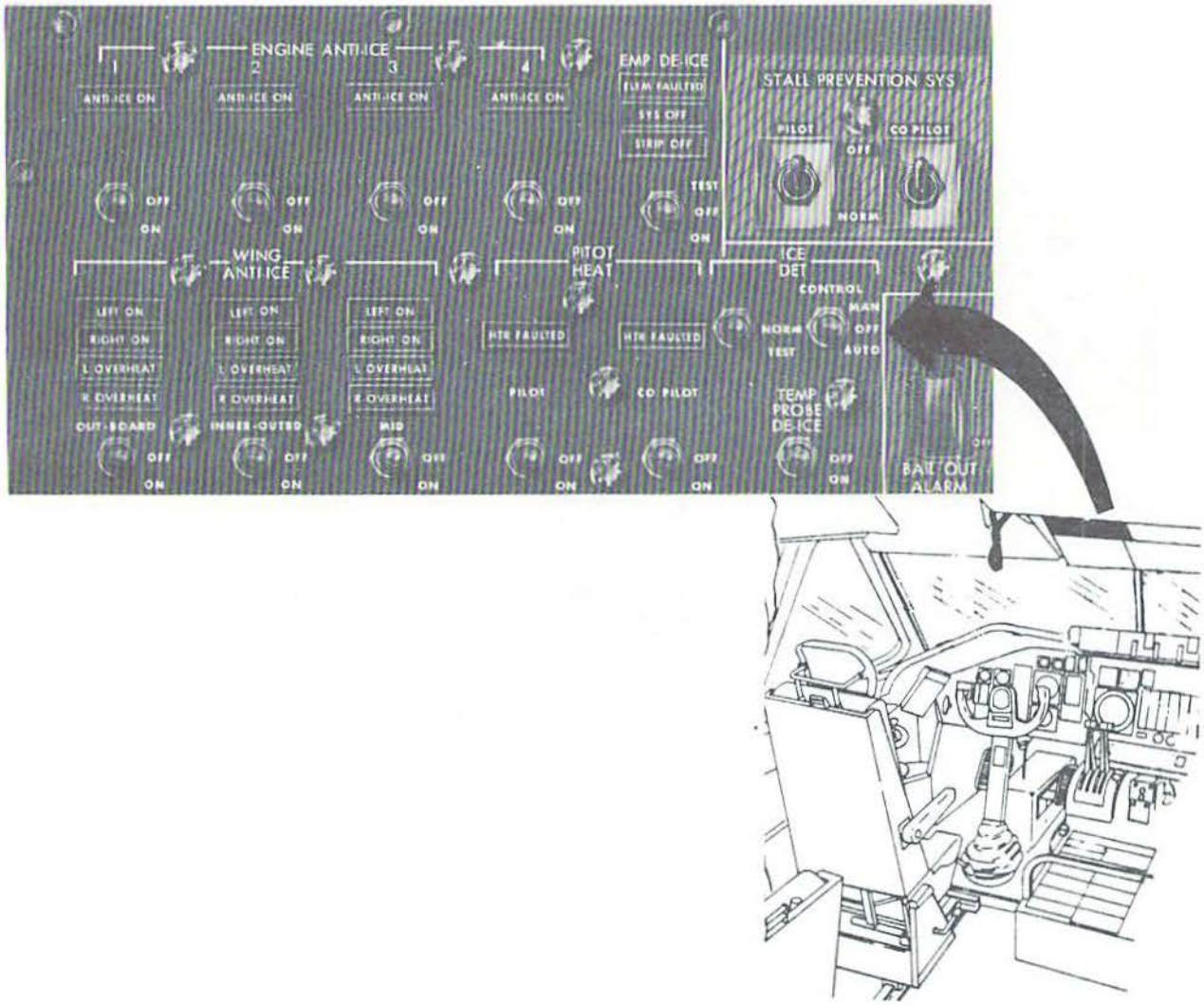

The ICE DET CONTROL switch has how many positions?

a. One.

b. Two.

c. Three.

The ICE DET CONTROL switch is a three (3) position lever-lock type switch.

Now let's discuss what each of the three (3) positions of the switch does as far as the anti-icing system is concerned.

The OFF position of the ICE DET CONTROL switch renders only the DETECTION SYSTEM INOPERATIVE. It does NOT have any effect upon the manual operation of the ENGINE ANTI-ICE switches.

The MAN position of the ICE DET CONTROL switch provides a VISUAL WARNING ONLY. When the temperature and moisture probes detect low ambient temperature and water at the same time, it will complete a circuit for a warning light. This warning light is located on the right hand side of the annunciator panel. Take a look.

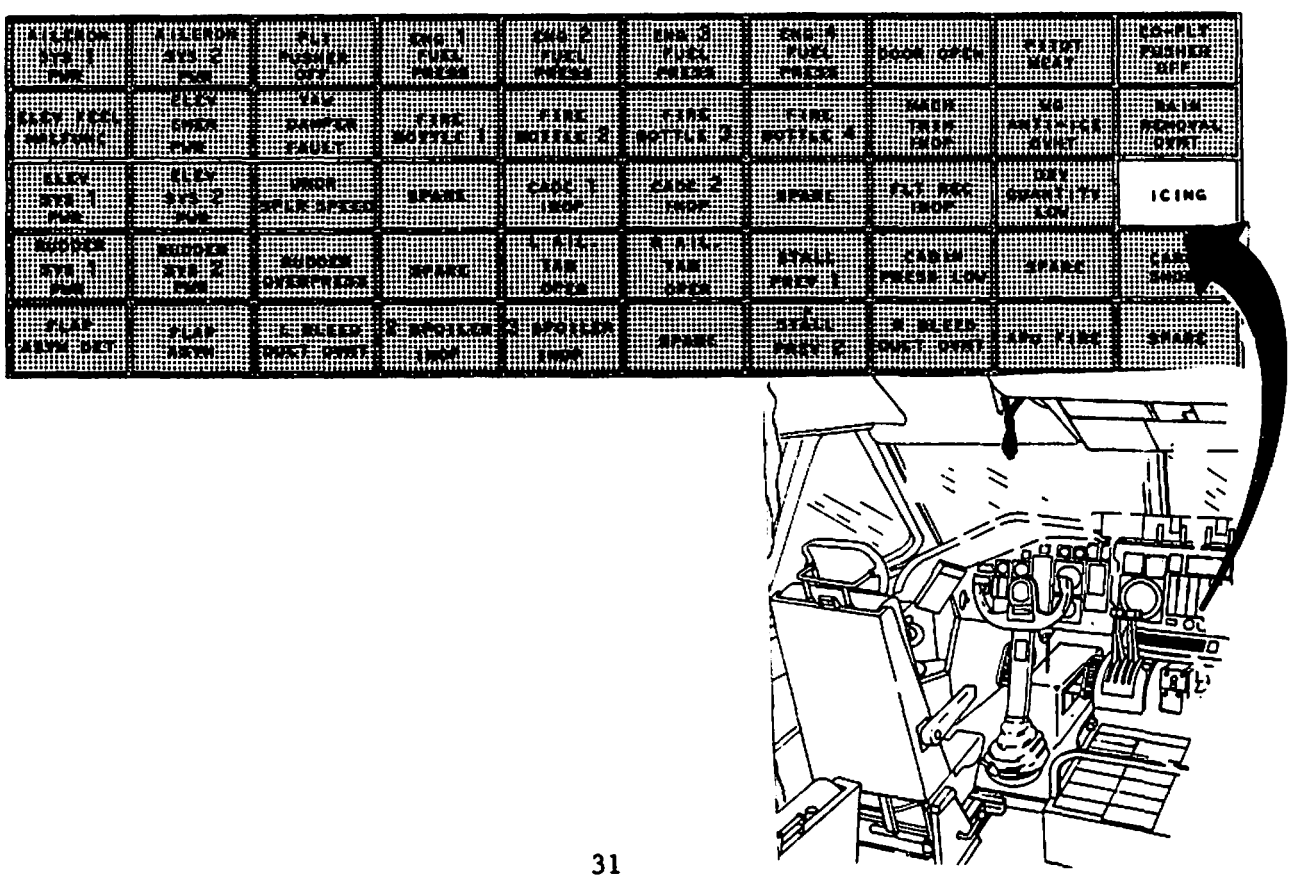

Did you find the ICING light? With the ICE DET CONTROL switch in the MANUAL position, the system will only furnish a warning that you are in an icing condition. The operator will then have to manually turn ON the appropriate ANTI-ICE systems.

You should have by now figured out what the AUTO position of the ICE DET CONTROL switch is going to do. You are right, the AUTO position of the ICE DET CONTROL switch provides a VISUAL WARNING and AUTOMATIC SYSTEM OPERATION. When the detecting probes have sensed the icing condition, a circuit is completed to the ICING light on the annunciator panel and the system starts functioning automatically. How's that for efficient operation.

Try this and see if you can figure out what indications you would get; if the ICE DET CONTROL switch is in the MANUAL position and icing conditions occur.

a. The ICING LIGHT only.

b. The ICING light and the master CAUTION lights.

The ICING light and the master CAUTION lights. How did you know about the master CAUTION lights? Been doing some homework?

A visual warning is all that would be received. Had the switch been in the AUTO position you would have received a visual warning plus the engine anti-icing system would have started functioning.

One other feature of the engine anti-icing system is this, once the system has been turned ON automatically, a holding circuit will hold the system in operation for ONE MINUTE after leaving the icing conditions and then it shuts off.

If the ICE DET CONTROL switch was in the OFF position no visual warning would be available.

TRUE

FALSE

Very true. With the ICE DET CONTROL switch in the OFF position, the detection system is inoperative.

There is one more switch that should be mentioned at this time. A TEST switch is provided to allow the operator to check out the system. It is a two position switch, TEST and NORM. The TEST position *simulates* icing conditions and completes the circuit to turn ON the ICING light on the annunciator panel. The NORM position returns the system to normal operation.

Now for the use and the restrictions of the system.

Normally the anti-icing system is turned ON in advance of flying into a known area of icing conditions. This would give the components a chance to warmup prior to entering the ice. There are other times though that the system should be turned ON.

Under certain atmospheric conditions, inlet components are susceptible to icing during ground operation, even when the outside air temperature is above freezing. The ENGINE and NACELLE Anti-Icing will be turned ON if the OAT is 8°C or below and visible moisture is present.

Why? Because the intake of the engine forms a venturi which usually has a pressure and temperature drop while the engine is running. Under these conditions, the system will be turned ON immediately after engine start to prevent ice buildup during ground operation.

During ground operation the Engine and Nacelle Anti-icing will be turned on manually if the OAT is:

a. 6°C and dry.

b. 8°C and dry.

c. 8°C or below and visible moisture is present.

The OAT is 8°C or below and visible moisture is present. Very true. The intake can freeze very quickly under these conditions.

During cruise conditions, if conditions are marginal, the ICE DET CONTROL switch can be placed in the AUTO mode; this will provide automatic engine anti-icing and a visual advisory indication on the annunciator panel.

There are some restrictions that are placed on the anti-icing system. Simply this - DO NOT place the ICE DET CONTROL switch in the AUTO position during takeoff, climb, descent and landing. Should actuation of the system occur, it would incur appreciable thrust loss during the takeoff and landing maneuver. If the takeoff is made in icing conditions, the pilot should place the Engine Anti-Icing Switches in the ON position after engine start and adjust the EPR accordingly.

When ambient temperature is above 10°C, operation of the engine anti-icing system is limited to a short ground test cycle not to exceed 10 seconds.

There is one more item that should be brought up as part of the anti-icing. Remember the EPR Ram Pressure Probe that made up part of the Engine Pressure Ratio system? Well, this probe has to be kept ice free also. It is heated electrically and NORMALLY receives electrical power through the pilot's pitot heat switch.

However, each EPR Ram Pressure Probe can receive electrical power through the individual Engine Anti-ice switch when it is placed ON, or all four probes will receive electrical power when the Ice Det Control switch is set to the AUTO mode and icing conditions are encountered.

Remember there are THREE ways to get EPR Ram Pressure Probe heat. They are:

1. Pilot's pitot heat switch.
2. Individual Engine Anti-icing switches.
3. AUTO mode of the Ice Det Control switch.

It's high time for a review just to make sure we have all the fine points in mind.

1. Each engine has a Fuel Heater installed. This heater uses High Pressure (I.D.) (O.D.) air. (Circle the correct answer)

2. The Running Wet system on the TF33-P-7 engine is an _____ type system.
   anti-ice/de-ice

3. The engine anti-icing control valves can be controlled either _____ by the Engine Anti-icing switch or _____ by the Ice Det Control switch.

4. What indications will the operator receive when both anti-icing valves open? _____

5. If one of the engine anti-icing valves fails to open when the system is put into operation, the ANTI-ICE ON light _____ _____ illuminate.

6. If one of the engine anti-icing valves fails to close when the system is shut off, the indication would be _____.

7. Name the three (3) positions of the Ice Det Control switch and list the function of each:

Position	Function
a. _____	a. _____
b. _____	b. _____
c. _____	c. _____

8. The EPR Ram Pressure Probe heat can be turned on by three (3) methods; they are:

   a. _____

   b. _____

   c. _____

9. Engine anti-icing should be turned on if the OAT is _____ and _____ _____ is present or before entering a known area of icing conditions.

10. For ground operation, the engine anti-icing system should be allowed to operate for a period of _____ seconds only, if the OAT is above _____ degrees centigrade.

11. An Ice Det Test switch is provided for the purpose of _____ probe detection of icing conditions for checking out the system.

12. The CSD oil tank is pressurized with (I.D.) (O.D.) air.

13. Zone II cooling is induced by (I.D.) (O.D.) air.

Check your answers and make any corrections that may be necessary. This completes the programmed text on the Engine Bleed Air System.

1. O.D.

2. anti-ice

3. manually automatically

4. ANTI-ICE ON light illuminated.

5. will not

6. ANTI-ICE ON light illuminated.

7. a. MANUAL Visual warning only.

   b. OFF Detection system inoperative.

   c. AUTO Visual warning and automatic system operation.

8. a. Pilot's pitot heat switch.

   b. Engine anti-ice switches.

   c. AUTO mode of the Ice Det Control switch.

9. 8°C visual moisture

10. 10 10

11. simulating

12. O.D.

13. O.D.

☆ U.S. GOVERNMENT PRINTING OFFICE: 1978: 771-094/18-78